411 4th Avenue
Fairbanks, AK 99701
Phone: (907) 474-2011
Fax: (907) 474-2001

www.allalaskagasline.com

Appendix G – 11 thru G-12

Binder 6

AGIA License Application
November 30, 2007

Board of Directors:
Mayor Jim Whitaker, Chairman · Mayor Bert Cottle, Vice-Chair · Merrick Peirce, Treasurer ·
Dave Cobb, Secretary · Luke Hopkins · Dave Dengel · Rex Rock · Randy Hoffbeck · Harold Curran

APPENDIX G-11

Yukon Pacific Company L.P.,
"Order Granting NGA Section 3
Authorization for Siting, Construction,
And Operation of LNG Facility"
71 FERC ¶61,197 (1995)

"Order Denying Rehearing"
72 FERC ¶61,226 (1995)

UNITED STATES OF AMERICA
FEDERAL ENERGY REGULATORY COMMISSION

Before Commissioners: Elizabeth Anne Moler, Chair;
Vicky A. Bailey, James J. Hoecker,
William L. Massey, and Donald F. Santa, Jr.

Yukon Pacific Company L.P.) Docket No. CP88-105-000

ORDER GRANTING NGA SECTION 3 AUTHORIZATION
FOR THE SITING, CONSTRUCTION,
AND OPERATION OF LNG FACILITY

(Issued May 22, 1995)

On December 8, 1987, Yukon Pacific Company L.P. (Yukon Pacific) filed an application seeking Commission authorization pursuant to section 3 of the Natural Gas Act (NGA) for the siting, construction, and operation of a liquefied natural gas (LNG) plant and related facilities at Anderson Bay, Port Valdez, Alaska to export LNG to Japan, the Republic of Korea, and Taiwan. The proposed LNG plant would receive natural gas for liquefaction from the Trans-Alaska Gas System (TAGS), a proposed 796.5-mile nonjurisdictional intrastate pipeline extending from the North Slope of Alaska at Prudhoe Bay to the proposed LNG plant.

In 1989 and 1990, the U.S. Department of Energy (DOE) issued its Order Nos. 350 and 350-A, respectively, which granted final approval for the export of Alaskan natural gas via the TAGS project. 1/ DOE's Order No. 350 provided that the Commission would conduct the environmental review for the LNG plant and related facilities. The Commission has completed its environmental review and is granting the requested section 3 authorization, subject to the safety and environmental mitigation measures specified herein.

PROPERTY OF THE
PUBLIC REFERENCE ROOM
DO NOT REMOVE

1/ See Yukon Pacific Corporation, DOE Opinion and Order No. 350, Order Granting Authorization to Export Liquefied Natural Gas From Alaska, ERA Docket No. 87-68-LNG (1989); Yukon Pacific Corporation, DOE Opinion and Order No. 350-A, Order Denying Requests for Rehearing and Modifying Prior Order for Purpose of Clarification, ERA Docket No. 87-68-LNG (1990).

I. Background

On May 27, 1987, the Commission issued a declaratory order 2/ which, among other things, determined that: (1) the Commission would not have jurisdiction over the TAGS project under NGA section 7 given the facts and circumstances presented by Yukon Pacific at the time; and (2) the Commission would have authority under NGA section 3 to approve or disapprove the place of export.

By orders issued in 1977 and 1978, the Commission granted the Alaskan Northwest Natural Gas Transportation Company (Alaskan NW) conditional certificate authority to construct the Alaskan segment of the Alaska Natural Gas Transportation System (ANGTS). 3/ This certificate authorization reflected the ANGTS' status as the "chosen" project under the Alaskan Natural Gas Transportation Act of 1976 (ANGTA), 4/ the special regulatory and procedural statute governing the ANGTS. Alaskan NW's application for a final certificate for the Alaskan segment of the ANGTS is currently pending in Docket No. CP80-435-000. The project, which would compete with TAGS, has been held in abeyance for various reasons, primarily involving project financing. Therefore, the Alaskan segment of the ANGTS has not yet been built.

On January 12, 1988, the President of the United States made a Presidential Finding Concerning Alaska Natural Gas (Presidential Finding) which allows the export of natural gas from the Alaskan North Slope. 5/ Absent such a finding, section 12 of ANGTA prohibits the export of Alaskan North Slope gas to countries other than Canada and Mexico.

In June 1988, the U.S. Department of Interior, Bureau of Land Management (BLM), and the U.S. Army Corps of Engineers (COE) issued a Final Environmental Impact Statement (TAGS EIS) for the 796.5-mile TAGS natural gas pipeline. 6/ Among other things,

---

2/ Yukon Pacific Corporation, 39 FERC ¶ 61,216 (1987).

3/ See Alcan Pipeline Company, 1 FERC ¶ 61,248 (1977); Alaskan Northwest Natural Gas Transportation Company, 3 FERC ¶ 61,290 (1978).

4/ 15 U.S.C. § 719, et seq.

5/ Presidential Finding Concerning Alaska Natural Gas, 53 Fed. Reg. 999 (Jan. 15, 1988).

6/ See Trans-Alaska Gas System Final Environmental Impact Statement, prepared by BLM and COE, Alaska District, dated

(continued...)

the TAGS EIS considered alternative sites for the location of the LNG plant and related facilities, and determined that the Anderson Bay, Port Valdez, Alaska site was the preferred site.

As stated, in 1989 and 1990 DOE issued its Order Nos. 350 and 350-A which gave final approval to the export of Alaskan natural gas via the TAGS project. Among other things, Order No. 350 adopted the findings of the TAGS EIS and stated that, with respect to the place of exportation for the LNG, all locations other than Port Valdez, Alaska, were rejected. DOE Order No. 350 directed the Commission to look at the construction, operation, safety, and environmental impact of the LNG plant and the marine LNG operations for the Port Valdez site. The ANGTS' sponsors appealed these orders. The court has held their appeal in abeyance pending the outcome of this proceeding.

II. Proposal

Yukon Pacific requests authorization for a place of export pursuant to NGA section 3. Yukon Pacific proposes to construct an LNG facility at the Anderson Bay site in Port Valdez, Alaska. The facility would include: (1) a 2.1 billion cubic feet per day LNG liquefaction plant; (2) four aboveground 800,000-barrel LNG storage tanks; (3) a marine facility to load two tankers within a 12-hour period; and (4) a cargo/personnel ferry docking facility. In addition, Yukon Pacific proposes to operate a fleet of 15 LNG tankers, each having 125,000 cubic meters of cargo capacity. The fleet would make 275 trips per year. Yukon Pacific states that the proposed LNG facility would take approximately 8 years to construct. However, Yukon Pacific states that deliveries could begin in approximately 5 years, i.e., prior to completion of the entire facility.

The proposed LNG facility would interconnect with the 796.5-mile nonjurisdictional TAGS pipeline, which would transport gas from Prudhoe Bay Alaska to the LNG facility for export to Japan, Taiwan, and the Republic of Korea. Approximately 14 million metric tons of LNG would be exported annually for a period of 25 years. The nonjurisdictional TAGS pipeline would transport up to 2.3 Bcf/d of gas to the LNG facility. Currently no facilities exist in Alaska to transport Alaskan North Slope natural gas to any market, domestic or foreign. However, the gathering systems necessary to gather gas from the North Slope reservoirs are in place.

6/(...continued)
June 1988. The Commission's environmental staff participated in the preparation of this document.

III. Interventions, Protests, and Procedural Motions

Notice of Yukon Pacific's application was published in the Federal Register on January 7, 1988 (53 Fed. Reg. 440). Timely motions to intervene or notices of intervention 7/ were filed by the State of Alaska; Alaskan NW; Foothills Pipe Lines (Yukon) Ltd. (Foothills); Pacific Gas and Electric Company (PG&E); Pacific Interstate Transmission Company (PIT); Northwest Pipeline Corporation; and Alyeska Pipeline Service Company and the Trans-Alaska Pipeline System (TAPS) Carriers, jointly. Late motions to intervene were filed by the Public Utilities Commission of the State of California (CPUC), Tennessee Gas Pipeline Company (Tennessee), and Exxon Corporation.

Yukon Pacific opposes the interventions filed by Foothills, Alaskan NW, Northwest Pipeline Corporation, Tennessee, PG&E, PIT, and the CPUC. Yukon Pacific contends that these parties should not be allowed to intervene in the proceeding because they do not have an interest that would be affected by the proceeding's outcome. In its May 27, 1987 order, the Commission determined that these parties had an interest in the TAGS proceeding. 8/ We find no reason to alter this conclusion here. Accordingly, the contested motions to intervene will be granted. Also, we conclude that granting the late motions to intervene will not delay or disrupt the proceeding or prejudice any party to it. Accordingly, for good cause shown, the late motions to intervene will be granted.

Alaskan NW and Foothills protest Yukon Pacific's application. Alaskan NW holds the conditional NGA section 7(c) certificates for the Alaskan Segment of the ANGTS and the Alaska Gas Conditioning Facility at Prudhoe Bay, Alaska. Foothills, a Canadian company, is the sponsor of the Canadian segments of the ANGTS. Alaskan NW and Foothills argue that Yukon Pacific's application should be rejected because it does not comply with the export application requirements contained in Part 153 of the Commission's regulations. Specifically, Alaskan NW contends that, among other things, Yukon Pacific's application does not provide information with respect to the rates to be charged for export, the names of the purchasers, and estimates of the natural gas reserves. Alaskan NW also argues that certain jurisdictional and other issues addressed in the Commission's May 27, 1987 order must be revisited.

7/ Timely, unopposed motions to intervene and notices of intervention are granted by operation of Rule 214 of the Commission's Rules of Practice and Procedure (18 C.F.R. § 385.214).

8/ Yukon Pacific Corporation, 39 FERC ¶ 61,216 (1987).

Alaskan NW and Foothills contend that the TAGS proposal should be rejected because it is fundamentally inconsistent with the spirit and letter of ANGTA, the ANGTS, and the U.S. international commitments related to the ANGTS. They contend that the TAGS project will jeopardize the completion of the ANGTS project because the proven natural gas reserves are insufficient to support both projects. Foothills argues that under ANGTA and the ANGTS certificates all of the North Slope gas supplies must be transported to U.S. domestic markets through the ANGTS system.

Yukon Pacific replies that its filing was not made pursuant to Part 153 of the Commission's regulations, but rather, in response to the Commission's May 27, 1987 order. Yukon Pacific argues that, in view of the May 27, 1987 order, the filing requirements of Part 153 do not apply to its narrowly constructed filing for approval of a place of export. Yukon Pacific states that the protestors' arguments regarding North Slope gas reserves are at odds with DOE Order Nos. 350 and 350-A and the Presidential Finding, which determined that there were sufficient reserves for both projects. Alternatively, Yukon Pacific contends that even if the gas supplies were insufficient to support both projects, that issue should be resolved by DOE rather than the Commission.

Alaskan NW and Foothills also filed a joint motion to reopen the May 27, 1987 declaratory order proceeding in Docket No. GP87-16, and to consolidate it with this proceeding. They contend that the rulings in the May 27, 1987 order must now be revisited in light of DOE Order Nos. 350 and 350-A. They argue that DOE's orders and BLM's 1988 right-of-way grant to TAGS constitute changed circumstances and facts that require the Commission to revisit its rulings in the May 27, 1987 order. Specifically, they claim that the changed circumstances are that: (1) TAGS might require use of the ANGTS's North Slope gas conditioning plant; 9/ (2) construction of TAGS might jeopardize the viability of the ANGTS; (3) there may be insufficient proven reserves to support both projects; and (4) the TAGS export project could eventually be used to deliver gas to U.S. consumers in the lower 48 states. Alaskan NW and Foothills argue that the proceeding in Docket No. GP87-16 must be reopened so that the Commission can examine and resolve issues relating to these changed circumstances.

Yukon Pacific opposes the motion to reopen and consolidate. It argues that DOE's orders do not involve changed facts and

---

9/ The ANGTS' sponsors have received Commission authorization to construct this facility, but the facility has not been built. See Alcan Pipeline Company, 1 FERC ¶ 61,248 (1977); Alaskan Northwest Natural Gas Transportation Company, 3 FERC ¶ 61,290 (1978).

circumstances which would require a reopening of the Commission's Docket No. GP87-16 proceeding. Yukon Pacific states that the issues raised in the motion to reopen were resolved in DOE Order Nos. 350 and 350-A and the Presidential Finding.

Further, Yukon Pacific argues that since North Slope reserves were not dedicated to ANGTS, DOE's approval of the TAGS export does not constitute a changed circumstance that would affect the Commission's ruling in its May 27, 1987 order. Yukon Pacific also notes that DOE Order No. 350 prohibited Yukon Pacific from taking any action that would compel a change in the basic nature and general route of the ANGTS or otherwise prevent or impair in any significant respect the expeditious construction and initial operation of the ANGTS. 10/ Yukon Pacific argues that this condition resolves any potential problems in the event TAGS and ANGTS were to share facilities or rights-of-way, including the gas conditioning plant. Further, DOE provided that the Office of the Federal Inspector (OFI), and not the Commission, would be responsible for the review and enforcement of this condition. 11/

Also, Yukon Pacific states that the U.S. Department of the Interior (DOI) required numerous conditions on BLM's right-of-way grant to TAGS to protect the integrity of the ANGTS right-of-way grant by BLM. Thus, Yukon Pacific contends that these DOE and DOI provisions cover all potential conflicts between TAGS and the ANGTS, and therefore, that the Commission should not address these topics.

Finally, Yukon Pacific states that the only limited regulatory/jurisdictional role the Commission would have over any potential joint use of the gas conditioning plant would be to rule on cost allocation matters. Yukon Pacific states that DOE Order Nos. 350 and 350-A indicate that the proper forum for resolution of such cost allocations would be a future ANGTS proceeding. In any event, this matter is not an issue in the instant proceeding.

The motion to reopen the record in Docket No. GP87-16 is denied. Among other things, the Commission's May 27, 1987 order was predicated on a description of the TAGS proposal at that time. 12/ The proposal has not fundamentally changed. With

---

10/ See DOE Order No. 350, at 44. This condition is referred to as the ANGTS Condition.

11/ The OFI was disbanded by Congress in the Energy Policy Act of 1992. The residual authority of the OFI was transferred to the Secretary of Energy.

12/ Yukon Pacific Corporation, 39 FERC at 61,752-53.

respect to the ANGTS's North Slope gas conditioning plant, the record does not support Alaskan NW and Foothills' assertion that TAGS might require use of this ANGTS facility. Rather, DOE Order No. 350 notes Yukon Pacific's statement that "the gas conditioning facility is not part of the export project because [Yukon Pacific] expects to purchase the gas from the North Slope producers after the gas is conditioned." 13/

Alaskan NW and Foothills' other arguments regarding changed circumstances also are at odds with DOE Order No. 350 and the Presidential Finding. Specifically, in DOE Order No. 350, DOE concluded that the domestic need for natural gas during the term of Yukon Pacific's export proposal could be met by production from reservoirs in the lower-48 states without North Slope natural gas. 14/ The Presidential Finding made a similar finding, and also allowed "any private party to develop [North Slope natural gas] and [set] up competition for this purpose." 15/

DOE Order No. 350 also considered and rejected the remaining arguments, stated above, raised by Alaskan NW and Foothills. In rejecting these arguments, DOE Order No. 350 stated the following:

> The DOE does not think that ANGTA mandates the rejection of a proposed export because there may be insufficient proven reserves for both the proposed export and ANGTS. Neither does it require the imposition of a condition to set aside certain reserves for ANGTS. Such actions would be inconsistent with the framework of ANGTA. ANGTA neither grants ANGTS an exclusive license to North Slope gas nor dedicates any particular reserves to ANGTS. 16/

The Commission is not persuaded that the facts and circumstances underlying the May 27, 1987 order have changed in any manner that would necessitate a reopening of that proceeding. Rather, the arguments put forth by Alaskan NW and Foothills amount to a collateral attack on DOE Order Nos. 350 and 350-A and the Presidential Finding. The instant proceeding is not the proper forum, and the Commission is not the proper agency, for reconsideration of these orders and the Presidential Finding. The Commission reaffirms its May 27, 1987 order.

13/ See DOE Order No. 350, at 16.

14/ See id., at 24.

15/ Presidential Finding, 53 Fed. Reg. 999 (Jan. 15, 1988).

16/ DOE Order No. 350, at 38-39 (cites omitted).

Nor is the Commission persuaded to reject or dismiss Yukon Pacific's application because it does not provide all of the information required by Part 153 of the regulations. Part 153, entitled "Application for Authorization to Export or Import Natural Gas," sets forth regulations promulgated under the Commission's authority under sections 3, 16, and 52 of the NGA. In the May 27, 1987 order, the Commission declined to exercise any discretionary authority it may have under section 3 of the NGA to regulate the siting, construction, and operation of the TAGS pipeline. In so doing, the Commission explained that "in the instance of an export of gas, unlike an import, there are no economic consequences to U.S. ratepayers. The cost of the project, and the risks inherent in it, will be borne (in whatever fashion) by the project sponsors, its lenders and investors, and its foreign purchasers of the gas. Thus, with respect to economic issues, there is no regulatory gap." 17/

The information required by Part 153 which Yukon Pacific did not provide pertains to economic matters, such as the filing of contracts and rate schedules, and not environmental matters. The May 27, 1987 order found that the Commission has jurisdiction under NGA section 3 to approve the place of export of the gas to be exported. 18/ Economic matters relating to the export were addressed by DOE in its Order Nos. 350 and 350-A. Accordingly, many of the requirements set forth in Part 153 are not applicable to Yukon Pacific's application. In any event, the Commission agrees with Yukon Pacific that, in view of the Commission's narrow jurisdictional finding in the May 27, 1987 order, Yukon Pacific was not required to file its application under Part 153. Rather, it was reasonable for Yukon Pacific to file its application in response to the May 27, 1987 order. Accordingly, under the circumstances presented here, the Commission will accept Yukon Pacific's application as being filed in response to the May 27, 1987 order, and not under Part 153. Therefore, Alaskan NW's and Foothills' requests that Yukon Pacific's application be dismissed as incomplete under Part 153 are denied.

IV. Discussion

The May 27, 1987 order, which we are reaffirming here, determined that the Commission has jurisdiction over the place of export of the gas to be exported. 19/ That order also stated that under the National Environmental Policy Act of 1969 (NEPA), an environmental impact statement (EIS) for the project would be required as a prerequisite to the Commission's approval of a

---

17/ Yukon Pacific Corporation, 39 FERC at 61,759.

18/ Id. at 61,760.

19/ Id.

place of export. A final EIS (FEIS) for the pipeline portion of the TAGS project was prepared by BLM and the COE, as stated above. The Commission has prepared a FEIS for the facilities associated with the place of export, as discussed below. Accordingly, the Commission finds that granting the requested section 3 authorization is not inconsistent with the public interest, subject to the safety and environmental mitigation measures specified below.

In DOE Order No. 350, DOE directed the Commission "to consider the safety and environmental aspects of the export site and facilities, including the liquefaction plant, the marine terminal, the LNG tankers and their routes in Prince William Sound and U.S. territorial waters, prior to approving any export site or facilities." 20/ DOE also emphasized the "need for the FERC to exercise the full extent of its Section 3 authority to regulate the marine transportation of LNG. Any FERC approval should include all appropriate preventive and mitigation measures to protect the public health, safety, and environment." 21/

The May 27, 1987 order stated that the Commission "has jurisdiction under section 3 of the NGA to approve or disapprove (to the extent not previously disapproved by [DOE]) the place of export of the natural gas transported by TAGS." 22/ DOE Order No. 350 states that "with respect to the place of exportation for the LNG ... all locations other than Port Valdez, Alaska, are rejected." 23/ The TAGS EIS considered alternative locations for the place of export, and concluded that Anderson Bay, Port Valdez, Alaska was the preferred site. Accordingly, the Commission's FEIS limits its consideration to the Anderson Bay site. 24/

In March 1995, the Commission's Office of Pipeline Regulation issued a FEIS which evaluates the environmental impact associated with the construction and operation of the facilities that would be required to liquefy pipeline natural gas, store the LNG, and export it via LNG tankers to various Asian Pacific Rim

---

20/ DOE Order No. 350, at 37.

21/ Id., at 37-38.

22/ Yukon Pacific Corporation, 39 FERC at 61,758.

23/ DOE Order No. 350, at 44.

24/ See Final EIS at pp. 2-42 - 2-46.

countries, as described above. 25/ Consistent with DOE Order No. 350, the FEIS evaluates only those facilities that are associated with the site of export, and not the nonjurisdictional TAGS pipeline, which was the subject of the TAGS EIS, discussed above.

The FEIS concludes that construction of the proposed Yukon Pacific LNG Project would result in a limited adverse environmental impact during construction and operation. This conclusion is based on information provided by Yukon Pacific and further developed from data requests, field investigations, literature research, alternatives analyses, and contacts with Federal, state, and local agencies and individual members of the public.

As part of its analysis, the Commission's staff developed specific mitigation measures, including additional studies and field investigations, that the Commission believes are appropriate and reasonable for the construction and operation of the LNG production and shipping facilities to proceed. The Commission believes that these measures will substantially reduce the environmental impact that could result from construction and operation of the project and ensure the safety of the facility as proposed. Where additional studies or field investigations are required, significant impacts that are identified would either be avoided or mitigated to non-significant levels.

The FEIS concludes that if this project is constructed and operated in accordance with the required mitigation measures, construction and operation of the project would be an environmentally acceptable action. The Commission concurs with this conclusion. Therefore, the Commission is conditioning the authorization granted herein upon the requirement that Yukon Pacific comply with the mitigation measures and environmental conditions attached to this order in the Appendix. Significant topics addressed in the FEIS are summarized and discussed below.

1. Earth Movement, Erosion Control, and Seismicity

The FEIS addresses the environmental impacts associated with earth movement and seismicity, and discusses methods to control erosion during construction. Approximately 392 acres of the site would be exposed; hence, the potential for soil erosion during construction is high. Yukon Pacific filed an Erosion Control Best Management Practices Manual (BMPM) and states that a detailed site-specific erosion and sediment control plan that conforms to the BMPM will be submitted to the Commission prior to

---

25/ See Yukon Pacific LNG Project, Final Environmental Impact Statement, issued by the Federal Energy Regulatory Commission, Office of Pipeline Regulation, March 1995.

construction. That plan would detail site preparation, slope stabilization, channel control, sediment retention, and revegetation. To ensure preparation of an adequate plan, the Commission is requiring that site-specific drawings and procedures be included in the plan specifying the number, size, and placement of erosion control structures, areas that would be revegetated, seedmixes, and mulching methods. The Commission is also requiring that a full time environmental inspector be onsite during construction to ensure compliance with the erosion control plan and all other required mitigation measures. Impacts on soil and those caused by erosion will be minimized by implementing the measures in the BMPM and the mitigation measures required here.

With implementation of the required mitigation measures, the stability and erosion of soils and overburden materials should not significantly affect construction or operation. The extensive excavation proposed for the site will remove and relocate approximately 3,018,000 cubic yards of overburden and 6,655,000 cubic yards of rock. During construction, these materials could be susceptible to slumping and erosion. Slumping can be controlled and should not pose serious adverse effects. Excavation of the benches could affect bedrock stability of the cutslope at the back of the site. Yukon Pacific proposes to install rock bolts in these walls. It also plans to dewater the bedrock using weepholes. These actions will minimize the potential for bedrock instability.

The steep slope behind the facility may direct snow avalanches into the rear of the site. Only facilities on the southern edge of the cargo dock may be in the path of one identified snow avalanche path (path No. 3). The mitigation measures contained in the Appendix require further evaluation of this path prior to completion of final design. Final design for structures in this path's vicinity must incorporate the required mitigation for the potential effects of this avalanche path.

Although there are no active faults on the site, there are faults related to ancient ruptures in the area. Therefore, there is a probability that the project will experience severe earthquakes during its lifetime. The project area has the potential for being affected by some of the largest earthquakes recorded in North America. The primary areas of concern are surface faulting, shaking of structures, soil liquefaction, and seismically induced waves. The major seismic concerns are shaking of structures, liquefaction, and seismically induced waves.

Once the appropriate design level earthquakes are chosen, the design to protect facilities against earthquake shaking is relatively straightforward. The Commission is requiring a few modifications to the design parameters proposed by Yukon Pacific, so as to afford the facility an adequate level of protection.

For those facilities that are placed on natural soil there are significant hazards from soil failure by liquefaction. Therefore, the Commission is requiring that critical facilities not be placed on natural soils.

Seismically induced waves are a major concern for the marine terminal portion of the facilities. The Commission is requiring certain mitigation in the final design and operation plans so as to reduce the effects of seismically induced waves. The rest of the plant site is at a high enough elevation that there should be little potential for damage with proper mitigation, which the Commission is requiring herein.

The Commission concludes that the Anderson Bay site satisfies the seismicity-related siting criteria in the U.S. Department of Transportation's (DOT) LNG regulations. However, there are a number of details of design that have not been fully addressed or finalized by Yukon Pacific, and which the Commission believes must be reviewed before finalization. A number of these details relate to the type of storage tank that ultimately is chosen. Therefore, the Commission is requiring that it be provided the opportunity to review and approve design details and the basis for them prior to construction.

2. Impacts on Freshwaters, Marine Waters, Wetlands, Vegetation, and Wildlife

The FEIS addresses the environmental impacts on freshwaters, marine waters, wetlands, vegetation, and wildlife. Key impacts on freshwater and marine water quality include the potential for increased nearshore turbidity from construction and fill activities, localized temperature effects within mixing zones of the desalination and Heat Recovery Steam Generator (HRSG)/Blowdown discharges, and water supply concerns.

The FEIS states that grading activities can be expected to cause a significant short-term impact on Nancy, Terminal, Strike, and Short Creeks due to turbidity increases and rechanneling. As a result of the project, Terminal Creek and the associated pond will be permanently lost as natural waterbodies. The FEIS recommends, and the Commission is requiring, a detailed water balance and design supply analysis of streamflow requirements in connection with the proposed dam as a water supply on Seven Mile Creek. The Commission is also requiring a Spill Prevention, Containment, and Countermeasure Plan, as well as a site-specific Erosion and Sediment Control Plan, to ensure that best management practices are followed to minimize impact on water quality.

The FEIS determined that there will be minor impacts, overall, on resident fish resources because of their limited distribution at the site. Anadromous fish resources spawning in Nancy Creek will not be significantly affected if disturbance to

the streambed is avoided or minimized and the runoff of fine sediments is controlled and appropriate construction time windows are observed. The impacts on anadromous fish spawning in Seven Mile Creek are less clear because the flow patterns are not well understood. To identify these flow patterns and how they might be affected by water releases and the damming of Seven Mile Creek, the Commission is requiring that Yukon Pacific, in conjunction with the Alaska Department of Fish and Game (ADFG), conduct an in-stream flow study. The Commission is requiring Yukon Pacific to coordinate with the ADFG, once the in-stream flow study has been completed, to determine a flow regime to minimize impacts on spawning fish.

The FEIS also determined that grading and clearing the banks will cause some disturbance of the streambed and increased runoff of fine sediments. However, if the disturbance and runoff are minimized by careful construction and adequate sediment and erosion control, as required by the mitigation measures in the Appendix, the impacts will not be significant.

Construction and operation of the proposed LNG facility is not expected to have any significant impact on local wildlife. In the case of waterfowl, there is a general lack of suitable nesting habitat at the Anderson Bay site, so the birds are not present to be affected. Similarly, the intertidal zones of Anderson Bay provide only limited foraging habitat for shorebirds compared to elsewhere in the Port Valdez region due to the lack of mudflats and other shallow water areas. Although the project will reduce the intertidal habitat of Anderson Bay, the Commission concludes that the impact on shorebirds will be minimal.

The greatest concern for raptors relates to the potential disturbance of bald eagle nest sites. To minimize these impacts, the Commission is requiring that Yukon Pacific conduct surveys for bald eagle nest sites in the year before the commencement of site activities and in each subsequent year. If birds move into the site, Yukon Pacific is instructed to consult with the Fish and Wildlife Service (FWS) and ADFG to determine appropriate action.

A variety of large ungulates and large predatory mammals occur within the Port Valdez area, but most in such low numbers in the vicinity of the project that adverse impacts are not expected. Indirect impacts could occur on mountain goats at Abercrombie and Sulphide gulches, 10 to 14 miles east of Anderson Bay, with the influx of the large construction workforce, but are not expected to be significant, given existing regulatory systems. Since both black and brown bears are known to inhabit the site, there is a potential for interaction between bears and people onsite. To reduce the potential conflict with bears at the site, the Commission is requiring, at the request of the

State Pipeline Coordinator (SPCO) and U.S. Department of the Interior, Office of Environmental Affairs (DOI/EA), that Yukon Pacific develop a mitigation plan stressing worker education programs and bear-proofing waste disposal areas. Impacts on small mammals and furbearers will be minor, arising from the loss of forest habitat through site clearing and preparation.

Construction of the LNG site will require clearing of approximately 392 acres of vegetation, primarily consisting of mature coastal spruce and hemlock forest. This represents a relatively minor impact since this vegetation covertype is well represented in the areas surrounding Anderson Bay and Port Valdez. Secondary impacts related to clearcutting large tracts may occur. These include increased soil erosion, loss of wildlife habitat, and secondary loss of trees along the edge of the cleared area. Other impacts associated with clearing include potential sedimentation of surface waters due to loss of vegetation. To reduce this impact, the Commission is requiring that a minimum 50-foot-wide natural vegetative buffer strip be maintained between all waterbodies, including marine waters, and construction areas.

3. Impact on Wetlands

The FEIS addresses the environmental impacts on wetlands. Development of the site will result in the direct loss of approximately 35.7 acres of estuarine and palustrine wetlands and 13.1 acres of non-wetland, subtidal marine habitat. Yukon Pacific has developed a mitigation plan, based on replacement or offset of the loss of wetland functional values. This mitigation includes rectification through repair or restoration, reduction or elimination of impacts through recovery and maintenance, and compensation for impacts through onsite and offsite replacement or substitution.

In general, the COE, National Marine Fisheries Service (NMFS), and Environmental Protection Agency (EPA) comment on the need for a thorough analysis of alternatives that would avoid the destruction of shallow intertidal areas, and the lack of information regarding successes and failures of other mitigation efforts that have been done in similar areas. Following publication of the Draft EIS, Yukon Pacific submitted to the Commission a Mitigation Policy Statement for the proposed project. This policy statement outlines Yukon Pacific's mitigation priorities and reasserts the company's commitment to environmental protection. However, it provides only general, broad statements and contains no new site-specific mitigation information regarding wetlands on the proposed LNG facility site.

In comments on the Draft EIS, the COE and NMFS also express concerns about the proposed mitigation plan. The COE comments that additional information is necessary regarding the proposed

onsite mitigation at the Site B' disposal area, and the NMFS expresses concern that the proposed mitigation at Site B' might be unsuccessful. The COE also indicates that the proposed onsite freshwater mitigation plan should be refined after the in-stream flow study at Seven Mile Creek and the salmon fry utilization study, both of which are required herein, are completed.

The EPA expresses concerns about the wetland evaluation technique that was used to evaluate wetlands and Yukon Pacific's Mitigation Policy Statement. The EPA contends that the Statement is vague and the technique flawed.

The DOI/EA indicates that a wetland complex that Yukon Pacific has identified for offsite mitigation supports spawning salmon and waterfowl. The wetland area, located at the Old Valdez townsite, will require a detailed investigation, which the Commission is requiring, prior to development of wetland mitigation to avoid disrupting spawning salmon and waterfowl using the existing ecosystem.

Other parties whose comments are summarized in a letter from the state of Alaska's Joint Pipeline Office (JPO) are also critical of the Mitigation Policy Statement. Some of these parties are concerned about the delayed timing for the development of a detailed mitigation plan and some feel that the Mitigation Policy Statement fails to adequately address marine impact mitigation, the issues of indirect and cumulative impacts, and mitigation monitoring.

The FWS indicates that there are several potential mitigation measures that Yukon Pacific should evaluate and incorporate into the detailed mitigation plan. These include habitat alteration measures that would result in increased tidal and subtidal productivity in areas where existing habitats will be affected.

In view of this information, the Commission concludes that additional information concerning Yukon Pacific's wetland mitigation plan is necessary. However, the Commission does not believe the detailed elements of the mitigation plan need to be addressed now. 26/ Therefore, the Commission is requiring Yukon Pacific to revise its wetland mitigation plan based on the final site grading, excavation, and soil disposal plans, and to submit the revised plan to the BLM/JPO and to the Commission's Office of Pipeline Regulation (OPR) for review and approval by the Commission's Director of OPR prior to construction.

26/ The EPA shared this view in its July 29, 1994 letter to the Commission, filed in this proceeding.

4. Impact on Marine Environment

As the FEIS discusses, construction of the Anderson Bay facility will impact the marine environment in several ways. Since estuarine spawning areas at the mouths of Seven Mile and Nancy Creeks are used by pink and chum salmon, these areas are highly sensitive to changes in the flow regime. Salmon fry use protected, shallow intertidal areas in Anderson Bay. The project will fill approximately 35 acres of this habitat and create changes in the rocky intertidal and subtidal areas in the tanker berthing location and along the face of the cargo dock. Although salmon fry have been observed in this area, the importance of this area relative to other parts of Port Valdez and other habitat types has not been documented. Therefore, it is difficult to determine the degree of impact on these habitat types. As a result, the Commission is requiring Yukon Pacific to conduct a study to determine the importance of this habitat and to develop mitigation to minimize impacts on salmon rearing habitat.

The release of heated water from the desalinization plant and HRSG/Boiler blowdown may impact the marine environment. To reduce this impact, the Commission is requiring Yukon Pacific to utilize a dilution model to determine the final design of the diffusers. The Commission is also requiring that, with respect to the mixing zone allowance, strict limits be set on the vertical extent of the mixing zone in Port Valdez. The FEIS also determined that shock waves from underwater blasting may injure or kill fish present in the area. The Commission is requiring blasting mitigation procedures to minimize these impacts.

The FEIS states that intertidal and subtidal construction, and blasting in the tanker docking area, will cause long-term physical changes in bathymetry and benthic substrate. In the short term, it is likely that intertidal and subtidal organisms and algae will be damaged, covered, or killed. Disruption of the rocky intertidal zone due to ice scour and extreme weather is common in Port Valdez. The intertidal marine community has adapted to this and tends to recover quickly. The subtidal community is subject to high rates of fine sediment deposition from glacial runoff. The benthos has adapted to this and areas covered by fill are unlikely to cause long-term impacts. The changes in substrate profiles and substrate types may cause changes in the benthic community, but since there is a low species diversity in Port Valdez, it is unlikely these changes will be significant. The Commission is requiring additional restrictions to the proposed ballast water exchange procedures to further minimize the potential to introduce exotic species or organisms from other geographic areas into Prince William Sound and Port Valdez.

While several species of marine mammals have been recorded in Valdez Arm, only sea otters and harbor seals occur more than occasionally. The greatest potential source of impact to them during the construction and operation of the project is blasting. Consequently, the Commission is requiring mitigation measures to ensure that marine mammals are not present at the time of underwater blasting.

5. Endangered Species

No federally listed or proposed endangered or threatened plant or wildlife species have been reported in the vicinity of the Anderson Bay site. Although occasional transients of listed falcon species may occur in the area, the Commission concludes that they would not be affected by the project. The Commission also concludes, with concurrence of the NMFS, 27/ that no federally listed or proposed endangered or threatened marine mammals would be adversely affected. A Biological Assessment was prepared and submitted to the NMFS as required under section 7 of the Endangered Species Act.

6. Impacts on Air Quality and Noise

The FEIS discusses the environmental impacts on air quality and the impacts associated with noise. The Anderson Bay LNG facility will have an impact on air quality in the project area during the 8-year construction period and a long-term impact from operation of the facility. At full capacity, the facility will emit approximately 2,528 tons per year (tpy) of nitrogen oxides (NO_x), 780 tpy of carbon monoxide (CO), 374 tpy of volatile organic compounds (VOC), 256 tpy of particulate matter (PM_{10}), and 89 tpy of sulfur dioxide (SO_2).

Primary sources of operational emissions are gas turbine-driven compressors used in the liquefaction process, gas turbines used to generate steam and electricity, and the tankers docked at the facility. The conservative screening model analysis predicted compliance for all pollutants with the National Ambient Air Quality Standards (NAAQS), and compliance for all pollutants with Prevention of Significant Deterioration (PSD) increments, except for nitrogen dioxide (NO_2).

Supplemental modeling for NO_2 using two sets of meteorological data collected near the proposed Anderson Bay facility depicts a range of potential impacts relative to the screening assessment. While these results cannot be relied upon to make conclusive determinations on the ability of the project to comply with applicable NAAQS and PSD increments, the

---

27/ See NMFS's letter filed on March 17, 1993 in this proceeding.

supplemental modeling shows levels below the respective NAAQS and PSD increments. When final equipment selections have been made, Yukon Pacific states that it will perform refined dispersion modeling, using meteorological data from a 40-meter tower, other nearby sources, and background ambient concentrations measured at the Alyeska Marine Terminal, to ensure that the facility will not cause violations of PSD increments, NAAQS, and Alaska standards. This modeling must be done for the facility to obtain any air emission permits from the Alaska Department of Environmental Conservation (ADEC). Consequently, this modeling and permitting must be done before construction of the facilities.

The FEIS determined that the Anderson Bay LNG facility will increase noise levels in the vicinity of the site during both construction and operation. Anderson Bay is a remote area with the closest permanent buildings being part of the Alyeska Marine Terminal. The nearest noise-sensitive areas (NSAs) are Shoup Bay State Marine Park, approximately 3.7 miles northwest of the proposed LNG main utility building; a camping area north of Dayville Road and east of the Alyeska Marine Terminal's eastern gate, approximately 5.9 miles east; and three residences at the mouth of Mineral Creek in Valdez, approximately 5.0 miles northeast.

Yukon Pacific's analysis of operational noise predicts a 24-hour equivalent sound level (Leq(24)) of 46 decibels of the A-weighted scale (dBA) at the site's eastern property line. The resulting impact on all NSAs will be well below a day-night sound level (Ldn) of 55 dBA. This noise analysis is based on the assumption that exhaust stack noise levels will not exceed 85 dBA at 10 feet and no other plant equipment will exceed a noise level of 85 dBA at 3 feet -- which is inconsistent with design Noise Control Specification A-09. Therefore, the Commission is requiring Yukon Pacific to file a revised noise analysis once the actual equipment is selected and manufacturer's noise data are available. The Commission is also requiring Yukon Pacific to conduct a noise survey once the terminal is in service, to ensure that noise impacts are below the 55-dBA Ldn limit at the NSAs.

7. Land Use, Recreation, Visual, Socio-Economic, and Cultural Impacts

The FEIS discusses land-use, recreation, visual, socio-economic, and cultural impacts. The FEIS states that the primary land use impact will be the conversion of 377 acres of spruce and hemlock forest and shrub, and 49 acres of palustrine and estuarine wetland and non-wetland, subtidal marine habitat to an industrial use. In addition, public access will be restricted to the 2,630 acres of land which will constitute the site and buffer zone. Restricting access to the upland areas adjacent to the plant site will have little impact, due to the remoteness of the area. For safety reasons, there will be a large dispersion

exclusion zone in which normal usage of land-based outdoor areas will be limited to less than 20 people. This will not affect water-based recreation or transient travel, including travel offshore. The 200-yard safety exclusion zone imposed by the Coast Guard will, however, render most of Anderson Bay off-limits to small craft, except in emergencies.

The proposed project will not have significant short- or long-term negative effects on recreation in the Port Valdez area, although during the construction period, the noise, dust, and activity could impact recreation in and near Anderson Bay and the popular Seven Mile Creek area. During operation, recreation will be limited in the upland areas adjacent to the plant site because of the buffer zone. The dispersion exclusion zone will restrict outdoor activities within an approximately 2.5-mile radius of the site. Temporary increased demand on recreational facilities in the City of Valdez from construction personnel may occur, but will probably not be great, with the greatest potential impact being on indoor facilities. This probably will be limited, because the number of workers will be reduced dramatically during the winter, when indoor recreational activity is the greatest.

The proposed project will permanently change the visual characteristics of a 2-mile stretch of the south shore of Port Valdez, by regrading the current rocky forested shoreline and forested backshore and constructing large industrial structures, which will contrast sharply with the environment. The overall impact is not considered to be significant, however, because of the low number of possible viewing points and their distance from the site. In addition, the vertical profile of the proposed LNG facility is low when compared with the Alyeska site, which will remain the more dominant visual presence. The Commission is requiring Yukon Pacific to prepare a visual mitigation plan which preserves the current shoreline and to develop appropriate landscape and architectural treatments to improve the aesthetic quality of the facility.

The Yukon Pacific LNG Project will significantly increase total employment and population in the City of Valdez during construction and operation of the plant. Temporary impacts associated with construction will be more significant than permanent impacts associated with operation of the project because employment levels will be higher during construction. The increase in population associated with construction and operation of the project will lead to greater demands on public services, creating a need for additional teachers, doctors, police officers, and fire fighters. Housing demand will increase as workers and their families relocate to Valdez.

The project will stimulate economic activity in Valdez. Local businesses will experience an increase in demand for goods and services from Yukon Pacific's workforce and their families.

Workers and their families will frequent local grocery stores, restaurants, and other establishments. Property tax payments by those associated with Yukon Pacific should offset increased costs associated with additional public service needs and could finance further growth and development within the city.

The movement of goods, supplies, and people in and out of Valdez will increase because of the project. The port and boat harbor will be significantly affected because access to the project site will only be possible by water. The waterways, in and around Port Valdez, will experience an increase in barge, tanker, and large boat traffic. Road, highway, and airport traffic will increase, especially during summer months when construction activity will escalate and tourists visit the city. Port and airport revenues could rise with greater activity.

Impacts on subsistence use of area resources are anticipated to be minor. Project construction will have minor impacts on subsistence use on Port Valdez, Anderson Bay, and the surrounding land area. These areas receive minor subsistence use and Valdez residents, the greatest users of the area, are in a designated non-rural area (thereby qualifying as recreational rather than subsistence users). Populations of land mammals and fish will be minimally affected by increased competition from the addition of the direct and indirect construction workforce to the area population. Tatitlek residences will also experience minor impacts on fishery resources from increased competition with non-rural (Valdez) users during construction and operation. Increased competition with construction and operational workforces might require restrictions on non-rural residents' harvesting of subsistence resources. Fishery and marine mammal resources and related subsistence uses could be minimally affected from increased shipping in Prince William Sound and the increased potential for accidents.

No previously recorded or newly identified cultural resource sites were identified during background literature research or field studies, respectively. The Alaska State Historic Preservation Officer has reviewed the results of a 1990 cultural resource survey and concluded, and the Commission concurs, that the project will have no effect on properties on or eligible for the National Register of Historic Places.

8. Cryogenic Design and Safety Review

Absent strict design and operational measures to control potential accidents, the operation of the proposed LNG facility poses a unique hazard that could affect the public safety. The primary concerns are those events which could lead to an LNG spill of sufficient magnitude to create an offsite hazard.

The Commission's staff and its cryogenic consultants conducted a cryogenic design and technical review emphasizing the engineering design and safety concepts, and the projected operational reliability of the proposed LNG facility and marine terminal. The review included a technical conference in Valdez on May 26, 1992, followed by a site inspection. Much of the technical data filed by Yukon Pacific reflects the initial conceptual design phase of the project. Yukon Pacific states that, in a later phase, it will develop the detailed design information necessary to assess the facility's adherence to the applicable standards, codes, and engineering practices. Since the material submitted by Yukon Pacific to the Commission is in the initial phase of design, supplemental information is required before a more definitive assessment can be made on the adequacy of design and on the adherence of the design to various applicable standards, codes, and engineering practices.

DOT's regulations governing the siting of an LNG facility require the establishment of both thermal and flammable vapor exclusion zones to protect offsite land uses. While the thermal exclusion zone is either confined to the plant property or the immediate vicinity of the waters at the two LNG tanker docks, the dispersion exclusion zone extends northward more than 13,000 feet offshore into Port Valdez. Although Yukon Pacific must ensure that normal land usage within the dispersion exclusion zone is below 20 people when the terminal becomes operational, transient travel through the zone, such as fishing boats or cruise ships, would be permitted. Although a finding of compliance with Part 193 of DOT's regulations will await DOT's evaluation of Yukon Pacific's responses, the remote location of the site and lack of population in the plant vicinity should ultimately permit compliance with the siting requirements. 28/

While LNG tankers have experienced safe operation without cargo tank spillage for more than 30 years, the possibility of a major LNG spill over the duration of the project cannot be discounted. The events most likely to cause a significant release of LNG cargo would be a grounding severe enough to penetrate the tanker's double bottom or collision with another vessel sufficiently large and with sufficient momentum to penetrate the double sides. The Commission's analysis concludes that:

(1) given the present and planned Coast Guard controls in the Prince William Sound Vessel Traffic Service (VTS) Area, LNG tankers can safely operate in these waters;

28/ See 49 C.F.R. Part 193, Liquified Natural Gas Facilities: Federal Safety Standard.

(2) the thermal radiation and flammable vapor cloud hazards from the maximum credible LNG tanker spill would not affect the general public;

(3) although it is possible for an LNG tanker to spill cargo in a grounding type incident, the liquid would rapidly vaporize and would not have the long-term environmental consequences associated with a major oil spill; and

(4) the addition of LNG tankers within the VTS Area would not significantly increase the percent potential of a collision with an outbound crude oil tanker.

9. Summary of Alternatives Considered

i. No Action and Alternative Sites

Alternatives considered that would avoid constructing the project at Anderson Bay include locating the project at another site and no action. As discussed above, the TAGS EIS considered alternative sites for the LNG facility. DOE Order No. 350 determined that the Anderson Bay, Port Valdez export site is preferable to all other export sites that were considered in the TAGS EIS and disapproved all sites other than the Anderson Bay site. Accordingly, further consideration of alternative sites is outside the scope of this FEIS. However, the FEIS does include and incorporates by reference the relevant sections of the TAGS EIS on this issue. The no action alternative would avoid all of the environmental effects of the project, but would result in the entire TAGS Project, including the pipeline, not being built.

ii. Alternative Construction Camp Sites

Yukon Pacific proposes to locate the construction camp onsite, along the banks of Seven Mile Creek. Several alternatives to the proposed construction camp at Seven Mile Creek were examined and are discussed in the FEIS. After a preliminary screening, three onsite alternatives were eliminated from further consideration because they offered no environmental advantages over the proposed onsite location. The offsite alternative at Valdez was considered in combination with three different access options. Two alternatives (ferry transport and road transport around the Alyeska Marine Terminal) were determined to be impractical but the third alternative, (road transport through the Alyeska property) was kept for further consideration.

The analysis in Section 4.16 of the FEIS compared the proposed camp site with an alternative camp site with access through Alyeska. The principal negative features associated with the proposed Seven Mile Creek camp site are: (1) the clearing of

47 acres of coastal spruce/hemlock forest compared to only 9 acres to link the access road for the Valdez camp site; 29/ (2) the construction of a 3.5-acre dam on Seven Mile Creek; 30/ and (3) the clearing and grading of the gorge at the outfall of Seven Mile Creek. 31/

The principal negative features associated with the Valdez camp site are related to the access road required to transport workers to the site. Specifically, the principal negative features are: (1) construction of a new 3-mile commuter access road partially through Alyeska and the TAGS right-of-way; 32/ (2) the disruption of six daily convoys of up to 40 buses on Alyeska security and plant operations, and on local and tourist traffic on the Richardson Highway and Dayville Road; and (3) social disturbance to the City of Valdez with a doubling of its population through the influx of up to 4,000 workers.

The Commission's staff solicited public comments on these alternatives. The public comments, including comments from the City of Valdez, the State of Alaska, and the two affected corporations all favored the onsite alternative at Seven Mile Creek. There was no local support for the Valdez Camp/Alyeska road option. Therefore, the Commission agrees with the finding in the FEIS that the preferred location for the camp is the site at Seven Mile Creek, as proposed by Yukon Pacific.

iii. Alternative Disposal Sites

Construction of the proposed LNG facilities will require substantial excavation and benching of the bedrock. Although most of the rock and overburden materials produced during excavation could be used as structural fill on the site, the remaining surplus material will require disposal. Yukon Pacific

---

29/ However, 47 acres represents only 13 percent of the total spruce/hemlock forest to be cleared within the construction limits of the site and is even less significant when compared with the Port Valdez forest area.

30/ However, this may be partially offset by the potential for the dam to maintain minimum stream flow rates to support salmon spawning.

31/ However, the Commission staff determined that clearing should be minimized within 100 feet of the streambanks and that the camp site should be limited to the west bank only.

32/ This road could be used during operations for all-weather emergency access.

identified and evaluated six potential disposal sites -- four entirely on land, one partially on land and in Anderson Bay, and one entirely in the deep water of Port Valdez. Three of the onshore sites were entirely within the boundaries of the proposed construction area. In addition to these alternative sites, the Commission's staff identified and evaluated two other disposal options. These options would involve the use of multiple onshore and offshore sites and the utilization of Yukon Pacific's proposed disposal Site B' for the construction of the proposed cargo dock facilities to reduce the overall impact on the shoreline and intertidal area of Anderson Bay.

The FEIS concludes that none of the sites located entirely on land would have enough storage capacity to store the excess volumes of waste material. Other factors, such as the potential to impact surface waters and the construction of new, offsite access roads further precluded these sites from being acceptable.

The Commission's staff evaluated open-water disposal opportunities, but found them to be inadequate for the following reasons: (1) the dumping of organic materials was unacceptable to the agencies and the public; (2) the amount of rock material suitable for disposal in this manner is small, relative to the total; and (3) the additional storage and handling facilities required to accommodate barging would partially offset the savings at Site B' and greatly increase disposal costs.

During the Commission's staff's evaluation of the use of the proposed disposal Site B' for the construction of the cargo dock, the staff identified several potential problems. These include: (1) size and area constraints; (2) the need for additional grading and filling of the Anderson Bay intertidal and shoreline areas; and (3) the orientation of the proposed cargo dock at Site B'. The staff determined that the proposed orientation of the cargo dock would result in a more difficult, time consuming, and possibly less safe approach and departure for barges and cargo ships. Additionally, Site B' would be used during the last 5 years of construction as a storage and laydown area. However, more importantly in terms of scheduling, Site B' would not be graded for use even until the end of the third construction year. Whereas, the construction of the proposed cargo dock would be a priority that could not be deferred for 3 years. No temporary solutions have been identified.

In pursuit of a solution to this disposal problem, the Commission's staff examined ways to increase the holding volume of the upland sites through the placement of retaining structures. However, the topographic limitations of the site overall lead to the conclusion that the cargo dock at Nancy Creek and disposal of excess excavated material at Site B', although impacting inter- and subtidal wetlands, are the most practical approaches, and are the environmentally preferred alternative.

The Commission is requiring certain environmental conditions to mitigate the impacts from the disposal on the inter- and subtidal wetlands.

10. Environmental Conditions and Mitigation Measures

To mitigate the environmental impact associated with the construction and operation of the proposed Yukon Pacific LNG Project, the Commission is requiring Yukon Pacific to comply with the environmental conditions and mitigation measures recommended in the FEIS. These environmental conditions and mitigation measures are set forth in the Appendix.

V. Conclusion

The Commission has completed its environmental review of Yukon Pacific's proposed LNG Project, and concludes that the proposal would result in a limited adverse environmental impact during construction and operation. However, the Commission concludes that if the project is constructed and operated in accordance with the required environmental conditions and mitigation measures, construction and operation of the project would be an environmentally acceptable action. Upon review of the record, the Commission concludes that Yukon Pacific's requested NGA section 3 authorization should be granted, subject to the safety and environmental mitigation measures specified in the Appendix. The Commission concludes that Alaskan NW's and Foothills' motions to reopen the record in Docket No. GP87-16 should be denied, as should the protests in this proceeding.

At a hearing held on May 16, 1995, the Commission on its own motion received and made a part of the record in this proceeding all evidence, including the application and exhibits thereto, submitted in support of the authorization sought herein, and upon consideration of the record,

The Commission orders:

(A) Yukon Pacific's application, under NGA section 3, for approval of a place of export at Anderson Bay, Port Valdez, Alaska, for its LNG Project is granted. Yukon Pacific is authorized to construct and operate the proposed Anderson Bay facilities, as described herein, and subject to the conditions contained in this order. Construction of the Anderson Bay facilities must commence within three years of the date of this order.

(B) The authorization granted in Ordering Paragraph (A) is subject to Yukon Pacific's compliance with the safety and environmental conditions and mitigation measures specified in the Appendix to this order.

(C) Alaskan NW's and Foothills' motions to reopen the record in Docket No. GP87-16 are denied.

(D) Alaskan NW's and Foothills' protests are denied.

(E) The contested timely motions to intervene filed by Foothills, Alaskan NW, Northwest Pipeline Corporation, PG&E, and PIT are granted.

(F) The contested late motions to intervene filed by the CPUC and Tennessee are granted.

(G) The late motion to intervene filed by Exxon Corporation is granted.

(H) All motions not specifically granted are denied.

By the Commission.

(S E A L)

Linwood A. Watson, Jr.,
Acting Secretary.

Environmental Conditions and Mitigation Measures

1. Yukon Pacific shall follow the construction procedures and mitigation measures described in its application and supplements (including responses to staff data requests) and as identified in the Final Environmental Impact Statement (FEIS), unless modified by these conditions. Yukon Pacific must:

   a. request any modification to these procedures, measures, or conditions in a filing with the Secretary of the Commission (Secretary);

   b. justify each modification relative to site-specific conditions;

   c. explain how that modification provides an equal or greater level of environmental protection than the original measure; and

   d. receive approval in writing from the Director of the Office of Pipeline Regulation (OPR) before using that modification.

2. The Director of OPR has delegation authority to take whatever steps are necessary to ensure the protection of all environmental resources during construction and operation of the project. This authority shall allow:

   a. the modification of conditions of this Order; and

   b. the design and implementation of any additional measures deemed necessary (including stop work authority) to ensure continued compliance with the intent of the environmental conditions as well as the avoidance or mitigation of adverse environmental impact resulting from project construction and operation.

3. Yukon Pacific shall file with the Secretary detailed alignment maps/sheets and aerial photographs at a scale not smaller than 1:6,000 identifying all staging areas, pipe storage yards, new access roads, and other areas that would be used or disturbed and have not been previously identified in filings with the Secretary. This includes any alteration to facility locations previously filed with the Commission. Approval for all areas must be explicitly requested in writing. All areas must be approved in writing by the Director of OPR before construction in or near that area.

4. Within 60 days of the acceptance of this authorization and before construction begins, Yukon Pacific shall file an initial implementation plan with the Secretary for review and written approval by the Director of OPR describing how Yukon Pacific will implement the mitigation measures required by this Order. Yukon Pacific must file revisions to the plan as schedules change. The plan shall identify:

   a. how Yukon Pacific will incorporate these requirements into the contract bid documents, construction contracts (especially penalty clauses and specifications), and construction drawings so that the mitigation required at each site is clear to onsite construction and inspection personnel;

   b. the number of environmental inspectors and how the company will ensure that sufficient personnel are available to implement the environmental mitigation;

   c. company personnel, including environmental inspectors and contractors, who will receive copies of the appropriate material;

   d. what training and instructions Yukon Pacific will give to these personnel (initial and refresher training as the project progresses and personnel change), with the opportunity for OPR staff to participate in the training session(s);

   e. the company personnel (if known) and specific portion of Yukon Pacific's organization having responsibility for compliance;

   f. the procedures (especially contract penalties) Yukon Pacific will follow if noncompliance occurs; and

   g. for each discrete facility, a Gantt or PERT chart (or similar project scheduling diagram), and dates for:

      (1) the completion of all required surveys and reports;
      (2) the mitigation training of onsite personnel;
      (3) the start of construction; and
      (4) the start and completion of restoration.

5. Prior to construction, Yukon Pacific shall file an affirmative statement with the Secretary, certified by a senior company official, that all company personnel, environmental inspectors, and contractor personnel who will be involved with construction and restoration have been

trained as specified in the Implementation Plan provided in response to condition 4d.

6. Yukon Pacific shall employ at least one independent environmental inspector. Such inspector shall be:

   a. responsible for monitoring and ensuring compliance with all mitigative measures required by this Order and other grants, permits, certificates, or authorizing documents;

   b. responsible for evaluating the construction contractor's implementation of the environmental mitigation measures required in the contract (see condition 4 above) and any other authorizing document;

   c. empowered to order correction of acts that violate the environmental conditions of this Order, and any other authorizing document;

   d. employed in a full-time position, separate from all other activity inspectors;

   e. responsible for documenting compliance with the environmental conditions of this Order, as well as any environmental conditions/permit requirements imposed by other Federal, state, or local agencies; and

   f. responsible for maintaining status reports.

7. Yukon Pacific shall file updated status reports prepared by the environmental inspector with the Secretary on a <u>biweekly</u> basis until all construction-related activities, including restoration and initial permanent seeding, are complete. On request, status reports will also be provided to other Federal and state agencies with permitting responsibilities. At a minimum, status reports shall include:

   a. the current construction status of the project, work planned for the following reporting period, and any schedule changes for stream crossings or work in other environmentally sensitive areas;

   b. a listing of all problems encountered and each instance of noncompliance observed by the environmental inspector during the reporting period (both for the conditions imposed by the Commission and any environmental conditions/permit requirements imposed by other Federal, state, or local agencies);

c. corrective actions implemented in response to all instances of noncompliance;

d. the effectiveness of all corrective actions implemented;

e. a description of any landowner/resident complaints which may relate to compliance with the requirements of this authorization, and the measures taken to satisfy their concerns; and

f. copies of any correspondence received by Yukon Pacific from other Federal, state, or local permitting agencies concerning instances of noncompliance, and Yukon Pacific's response.

8. Yukon Pacific must receive written authorization from the Director of OPR before commencing service from each phase of the project. Such authorization will only be granted following a determination that rehabilitation and restoration of the project site is proceeding satisfactorily.

9. Within 30 days of placing the facilities in service, Yukon Pacific shall file an affirmative statement with the Secretary, certified by a senior company official:

a. that the facilities have been constructed in compliance with all applicable conditions, and that continuing activities will be consistent with all applicable conditions; or

b. identifying which of the conditions Yukon Pacific has complied with or will comply with. This statement shall also identify any areas where compliance measures were not properly implemented, and the reason for noncompliance.

10. Yukon Pacific shall provide the State Pipeline Coordinator and the U.S. Army Corps of Engineers with a copy of any submittal that is filed with the Secretary in response to conditions in this authorization.

11. Yukon Pacific shall notify the Commission's environmental staff by telephone or facsimile of any environmental problems identified by other Federal, state, or local agencies on the same day that such agency notifies Yukon Pacific.

12. Yukon Pacific shall commence construction of its Anderson Bay facilities within 3 years of the date of the Commission's Order, or shall file for a motion to extend this deadline.

13. Yukon Pacific shall prepare a site-specific erosion control and sedimentation plan that:

    a. provides detailed procedures for controlling sediment from access road construction including the roadbed, cut and fill materials, culvert installation, and bridge installation;

    b. provides detailed drawings that show the number, size, and placement of erosion and sediment control structures on the site;

    c. provides detailed drawings which show the areas that would be revegetated and include a description of the seedmix, seeding methods, soil amendments, and mulching methods that would be used; and

    d. shall be filed, together with comments of the Alaska Department of Natural Resources (ADNR), if any, with the Secretary for review and approval by the Director of OPR prior to initiation of construction.

14. To avoid the potential for avalanche damage to facilities and hazards to personnel at the construction dock area, further field evaluation of avalanches on path No. 3 shall be undertaken prior to the development of final design in order to determine the need for mitigation.

15. All final seismic design plans and specifications shall be filed with the Secretary for review and approval by the Director of OPR. The seismic design measures shall take into account the specific recommendations and results of studies specified below:

    a. The intracycle earthquake specified for facility design purposes shall be set at moment magnitude (M_w) 8.2.

    b. The Maximum Design Earthquake (MDE) value for the effective acceleration shall be at least 0.6 gravitational force (g).

    c. Yukon Pacific shall evaluate the adequacy of the long period levels of the proposed design response spectra using seismological modelling analyses to estimate directly the long period ground motion from postulated

critical design earthquakes on the Aleutian megathrust and in the Yakataga Gap. A report on the methods, assumptions, and results shall be filed with the Secretary. The results of that analysis shall be incorporated into the seismic design, as appropriate.

d. The vertical design accelerations shall be set as equal to the horizontal acceleration for design purposes.

e. For all structures not directly supported by rock, design spectra for "competent soil conditions" as recommended by Newmark and Hall (1982) shall be used. Under no circumstances shall the agreed upon criteria be less than proposed in the application.

f. Yukon Pacific shall conduct a specific analysis of the duration of strong ground shaking likely to be experienced at the site as a result of the design earthquake, and document that the structures are designed to accommodate the ductility demand associated with the duration of the shaking. A report on the methods, assumptions, and results shall be filed with the Secretary. The results of that analysis shall be incorporated into the seismic design, as appropriate.

g. Yukon Pacific shall file with the Secretary a discussion of each of the following issues, as the design of the facility progresses:

(1) Unless there is clear and convincing justification for lesser values, the load combination factors specified in ASCE 7-88 (1990) shall be used.

(2) Use of the calculated flat-roof snow load of 169 pounds per square foot in conjunction with earthquake loads appears to be conservative. This snow load corresponds to a mean recurrence interval of approximately 100 years and does not account for any load reduction due to snow slide-off on the steeper roof slopes. If the ASCE 7-88 (1990) load combination factors are used, then the design snow load with a 50-year recurrence interval could be used in conjunction with earthquake loads.

(3) The design load criteria shall account for the possibility of combined seismic and impounded fluid loading for the outer tank. This load combination could be critical for the so-called "double integrity" tank designs.

(4) Since snow load is one of the controlling design factors, the design basis for snow load shall be consistent with that for earthquakes. Therefore, the design for maximum snow load shall use an annual failure probability of 10^{-4}.

(5) For the double integrity tanks, the secondary containment is not isolated from the primary containment, thus creating the potential for collapse of the outer tank as the inner tank fails. There does not appear to be a structurally independent impounding system.

(6) The detail for the joint between the floor of the double concrete wall tank needs additional development to assure proper function under strong ground shaking and possible differential movements and settlement of the tank footing.

(7) The behavior of the circumferential prestressing for the double concrete wall tank is unclear in the event of a wire failure due to corrosion or wind borne missile impact.

(8) Weathering effects on the bedrock formation could affect the rock anchors for the tank foundation and rock slopes in the project area.

h. Yukon Pacific shall develop plans to mitigate the effects of damaging waves (especially those resulting from subsea landslides) on the marine terminal facilities and on tankers at berth.

i. Yukon Pacific shall conduct an analysis of rock slope stability and potential effects of snow avalanches on the plant, especially under seismic conditions, and incorporate appropriate mitigative measures into the plant design and operation plans.

16. To clearly demonstrate water supply requirements for the proposed facilities, Yukon Pacific shall prepare, in consultation with the ADFG, and file with the Secretary, a detailed water balance and design supply analysis, prior to initiation of construction.

17. Yukon Pacific, in consultation with the Alaska Department of Fish and Game, Alaska Department of Natural Resources, and Alaska Department of Environmental Conservation and in conjunction with preparation of the detailed water balance and design supply analysis, shall conduct an in-stream flow

study to determine the minimum flow requirements to minimize impact on spawning fish and maintain flow through Seven Mile Creek above the minimum levels. The results of this study, based on a minimum of 2 years flow monitoring, shall be reviewed with the ADFG, ADNR, and the ADEC for consideration of additional flow regulation mitigation. The results of the study incorporating comments of reviewing agencies, shall be filed with the Secretary for review and approval by the Director of OPR.

18. Yukon Pacific, prior to commencing construction, shall develop and file with the Secretary for review and approval by the Director of OPR, a Spill Prevention, Containment, and Countermeasure Plan (SPCC Plan) that would describe the preventive and mitigative measures it would employ to minimize the impact associated with accidental spills, both in freshwater streams as well as those that may occur in nearshore marine waters. These measures shall include but not be limited to: requiring all fueling and lubricating to be done in areas designated for such purposes, with such areas to be located at least 100 feet away from all waterbodies; specifying collection and disposal procedures for wastes generated during vehicle maintenance; requiring each construction crew to have on hand sufficient supplies of absorbent and barrier materials to allow the rapid recovery of any spills; and developing standing procedures regarding excavation and offsite disposal of any soil materials contaminated by spillage. In addition, Yukon Pacific shall ensure that construction contractors are able to demonstrate to environmental, local, or state inspectors their ability to implement the SPCC Plan. The SPCC Plan shall also identify the types and quantities of hazardous materials that would be stored or used on the construction site.

19. To document compliance with Federal and state stormwater discharge requirements, Yukon Pacific shall develop a stormwater monitoring plan. This plan shall be developed in conjunction with the new National Pollutant Discharge Elimination System (NPDES) stormwater permit requirements that will be imposed under Section 402 of the Clean Water Act (40 C.F.R. Part 122.26(c)(ii)). This plan shall be prepared in conjunction with the site-specific Erosion and Sediment Control Plan and shall provide a detailed description of the stormwater collection and treatment process, including best management practices to control pollutants in stormwater discharges during both construction and operation. These plans shall be filed with the Secretary, and provided to the U.S. Environmental Protection

Agency as part of the documentation with the National Pollutant Discharge Elimination System permit application.

20. To prevent potential disturbance of the limited anadromous and resident fish habitat in Nancy Creek, the cargo dock access road crossing shall be made above a small falls which may currently be acting as a fish barrier.

21. To minimize impacts due to siltation on spawning gravels and incubating redds from construction and from road runoff: (1) any in-stream construction shall be limited to the period between May 15 and July 15 when there are no spawning fish or incubating redds present; and (2) sediment traps shall be placed along the road to prevent fines from running off into the stream. To prevent loss or disruption of habitat, there shall be no other in-stream construction activity or in-stream equipment crossing or fording the streambed at any time. Any temporary crossing structures shall be limited to portable construction bridges or crushed, clean rock and culvert bridges.

22. No construction equipment or in-stream activity shall occur in Seven Mile Creek below the falls and any in-stream construction or activity which may cause siltation (above and below the falls) shall be scheduled between May 15 and July 15 when there are no salmon or incubating redds present in the stream.

23. Yukon Pacific shall prepare a revised site plan that avoids grading and clearing the riparian zones within 100 feet of the streambanks along Seven Mile Creek above the proposed dam. The revised plan shall also avoid grading and clearing to preserve the gorge area surrounding the water falls and the associated intertidal shoreline area located on either side of the confluence of Seven Mile Creek and Anderson Bay. The revised plan shall be filed with the Secretary for review and approval by the Director of OPR.

24. Yukon Pacific shall conduct surveys for bald eagle nest sites during the year prior to the commencement of site activities and each year subsequently, to determine nesting activity at the site. If active nests are found, Yukon Pacific must consult with the U.S. Fish and Wildlife Service to ensure the project does not violate the Bald and Golden Eagle Protection Act.

25. Yukon Pacific shall contact the FWS and ADFG regarding convening a panel of agency bear experts and develop, in consultation with the ADFG, the FWS, and the Valdez Chief of Police, a plan to mitigate impacts on bears arising from

both habitat loss and from bear/human interaction. This plan shall detail procedures for avoiding human/animal conflicts and shall stress implementation of an education program for workers, in addition to methods of bear-proofing the site. This plan shall be filed with the Secretary for review and approval by the Director of OPR prior to initiation of construction.

26. Yukon Pacific shall, where feasible, maintain a natural, uncleared vegetative buffer strip at least 50 feet wide between construction areas and waterbodies. Yukon Pacific shall indicate the location and size of these buffer strips on its final site plans that would be filed with the Secretary prior to construction. Where Yukon Pacific believes maintenance of a 50-foot-wide buffer strip would be infeasible, Yukon Pacific shall file with the Secretary for review and approval by the Director of OPR prior to construction a detailed explanation of why the required buffer strips cannot be maintained. Yukon Pacific shall include with this explanation a description of alternative sediment control measures that would be employed on a site-specific basis instead of maintaining the vegetative buffer strip.

27. Yukon Pacific shall file with the Bureau of Land Management and Alaska's Joint Pipeline Office for review and with the Secretary for review and approval by the Director of OPR prior to construction a revised wetland mitigation plan based on the final site grading, excavation, and spoil disposal plans that contains the following:

    a. field delineations and results from site investigations that verify the size, vegetation, and functional values (including salmon and waterfowl habitat) of the wetlands and subtidal marine habitats that would be affected or enhanced on and off the site;

    b. identification of, and proposed mitigation for, all the subtidal marine habitats that would be affected by the site's development and a discussion of the proposed mitigation's probability of success;

    c. identification of the locations and land ownership of the proposed mitigation and enhancement areas;

    d. a detailed literature review of the other wetland and subtidal marine habitat mitigation projects that have been conducted in the Pacific Northwest, including a summary of the successes and failures of these projects;

e. site-specific construction plans that incorporate information learned from the literature review regarding how the proposed mitigation would be implemented including detailed information regarding the key factors that are known to influence the success of wetland construction (e.g., elevation, substrate, and hydrology);

f. details regarding how the proposed wetland mitigation would be monitored and evaluated following construction to ensure its success; and

g. written comments, if received, from Alaska's Joint Pipeline Office, the U.S. Army Corps of Engineers, the National Marine Fisheries Service, the U.S. Fish and Wildlife Service, and the U.S. Environmental Protection Agency on Yukon Pacific's revised wetland mitigation plan.

28. Yukon Pacific shall use a dilution model to design the diffusers for the high temperature of the desalination and HRSG/Blowdown discharges, and determine the vertical extent of the mixing zone so that the surface and bottom thermal layers of Port Valdez are not subject to periodic hot water surges.

29. Yukon Pacific shall require ballast water discharge/exchange to occur at least 10 kilometers south of Hinchinbrook Entrance, in addition to its proposed 36-hour period, in order to protect against any waiting or slow travel scenarios.

30. Yukon Pacific, in consultation with the ADFG, ADNR, and FERC, shall develop and conduct a salmon fry utilization study, designed to determine the importance of the nearshore areas affected by plant construction relative to other areas in Port Valdez. In particular, the proposed B' disposal area must be addressed in detail. This study along with proposed mitigation shall be submitted to the ADFG and ADNR and filed with the Secretary for review and approval by the Director of OPR.

31. Yukon Pacific shall prepare a blasting plan that considers the following measures: (1) scare charges and/or bubble curtains to move resident fish away from the area prior to blasting; (2) coordination with the ADFG and the Solomon Gulch hatchery personnel to schedule blasting activities when adult or juvenile salmon are likely to be in the area; and (3) use of NMFS-approved spotters or lookouts, to ensure

marine mammals are not present within the zone of influence prior to blasting.

32. Yukon Pacific shall consult with the EPA, ADFG, and NMFS to determine the allowable location, frequency, and duration of warm water discharges into Port Valdez.

33. Yukon Pacific shall file a copy of all air emission permit and open burning permit applications submitted to the Alaska Department of Environmental Conservation with the Secretary. Specifically, Yukon Pacific must file its Prevention of Significant Deterioration permit from the ADEC prior to receiving a written notice to proceed with any construction from the Director of OPR.

34. Yukon Pacific shall file with the Secretary a revised acoustical analysis of the Anderson Bay LNG site reflecting far-field sound data of equipment finally selected (from either the manufacturer or a similar unit in service elsewhere), manufacturer's specifications and attenuation data for the intake and exhaust silencers finally selected, and the actual noise control equipment, for review and written approval of the Director of OPR before commencing construction of the compressor facilities.

35. Yukon Pacific shall file with the Secretary a noise survey of the Anderson Bay LNG Terminal no later than 60 days after placing the terminal in service. If the noise attributable to the operation of the facility exceeds an Ldn of 55 dBA at nearby noise-sensitive areas, additional noise controls shall be added to meet that level within 1 year.

36. Yukon Pacific shall file with the Secretary for review and approval by the Director of OPR prior to construction a visual mitigation plan that includes:

    a. shoreline protection measures that provide a more natural appearance by preserving existing landform and mature vegetation at prominent features along the shoreline, developed in conjunction with the recommended 50-foot-wide vegetation buffer strips; and

    b. landscape and architectural treatments that reduce the contrast of the aboveground structures with the natural landscape.

37. Yukon Pacific shall not disturb the monument to Harry Alden Henderson at Anderson Bay.

38. An additional technical conference (or conferences) shall be held as engineering design develops so that present areas of uncertainty may be more fully explored. These conferences shall be held prior to initiating construction at the site. At least one technical conference shall be held prior to initiation of construction after designs are finalized and major vendors (including LNG and other major storage tanks) have been selected and complete design details have been submitted to FERC staff. The applicant shall also provide design details to the Office of Pipeline Safety of the U.S. Department of Transportation (DOT) and the U.S. Coast Guard Captain of the Port of Valdez so that they may have the opportunity to participate in the technical conferences to assure compliance with their applicable regulations.

39. Yukon Pacific shall not commence construction without a written notice to proceed from the Director of OPR. Any major alterations to facility design shall be filed with the Secretary for review and written approval by the Director of OPR prior to initiation.

40. Onsite staff inspections shall be conducted with Yukon Pacific as significant milestones develop during the construction phase and prior to commencement of initial facility operation.

41. Following commencement of operation, the facility shall be subject to regular FERC staff technical reviews and site inspections on at least a biennial basis or more frequently as circumstances indicate. Prior to each FERC staff technical review and site inspection, the company shall respond to a specific data request including information relating to possible design and operating conditions that may have been imposed by other agencies or organizations, provision of up-to-date detailed piping and instrumentation diagrams reflecting facility modifications and provision of other pertinent information not included in the semi-annual reports described below.

42. Yukon Pacific shall submit quarterly reports to the FERC after initiating construction and semi-annually thereafter through the operational period. During the construction phase the quarterly reports shall provide construction status of major components including significant design and schedule modifications required (and/or anticipated). The reports also shall address changes in facility design including anticipated future plans. During the operational phase the semi-annual reports shall provide changes in facility design and operating conditions, abnormal operating experiences, activities (liquefaction and LNG shipping

schedules), and plant modifications including those proposed during the forthcoming 12-month period. Abnormalities shall include but not be limited to storage tank vibrations and/or vibrations in associated cryogenic plumbing, storage tank settlement, significant equipment and instrumentation malfunctions or failures, nonscheduled maintenance or repair (and reasons therefore), relative movement of the inner vessel, vapor or liquid releases, fires involving natural gas, refrigerants and/or from other sources, negative pressure (vacuum) within the LNG storage tanks and higher than predicted boiloff rates. The reports shall be submitted within 45 days after each period ending December 31 and June 30. Included shall be a section entitled "Significant plant modifications proposed for the next 12 months (dates)". The section shall be included in the semi-annual operational reports to provide the Commission's staff with early notice of anticipated future construction and maintenance projects at the LNG terminal.

43. A permanent all-weather access road shall be built and maintained year-round to allow emergency equipment and personnel access/egress between the plant and the City of Valdez.

44. If double- or increased-integrity LNG storage tanks are selected, Yukon Pacific shall submit to the DOT for approval, and to the FERC, the equivalent impact load analysis required by Section 193.2161(b) and 193.2155(c) of the DOT regulations. If written approval of the impact analysis cannot be obtained, Yukon Pacific shall construct separate and independent impounding systems for such storage tanks consistent with existing standards and codes.

45. Yukon Pacific shall establish direct telephonic linkage with the Alyeska Terminal and the Coast Guard Vessel Traffic Center in Valdez and ensure that procedures for notification and response to potential incidents are included in the emergency plans for each facility.

46. Yukon Pacific shall comply with the following Coast Guard recommendations prior to commencement of shipping activities:

    a. an LNG tanker and any other tank vessel shall not be underway at the same time in Valdez Arm, Valdez Narrows, or Port Valdez;

    b. LNG tankers shall enter the Traffic Separation Scheme (TSS) at Hinchinbrook Entrance;

c. LNG tankers shall be conned (i.e., the steering of the tanker shall be directed) by a pilot licensed for the portion of Prince William Sound being transited;

d. an LNG tanker and any other tank vessel shall maintain a separation of not less than 5 nautical miles, except when the LNG tanker or the other tank vessel is moored, at anchor, or in the opposing lane of the TSS;

e. unless moored at the terminal in Port Valdez, an LNG tanker shall be attended by an adequate number of ship assist tugs;

f. while in the Vessel Traffic Service Area, all LNG tankers shall have a towing bridle or wire rigged and ready for immediate use; and

g. all VTS regulations that apply to tank vessels greater than 20,000 deadweight tons shall also apply to LNG tankers regardless of size.

47. Yukon Pacific shall conduct a study by a creditable firm to review the operation of the VTS and provide suggestions for reducing the risks involved with the inclusion of LNG tankers in the system.

48. Yukon Pacific shall confine the camp site to the west bank of Seven Mile Creek and configure the layout so as to leave the shoreline of Port Valdez in a natural (ungraded and vegetated) condition. When the construction period is finished, the camp shall be dismantled and removed from the site and the area restored vegetatively in accordance with a plan to be developed in conjunction with the Trans-Alaska Gas System Mitigation Policy of April 25, 1994.

APPENDIX G-12

Anderson Bay LNG/MT
Facility Air Quality (PSD) Permit

Air Quality Permit

YUKON PACIFIC CORPORATION

Air Quality Permit
Approval
08/05/97

YUKON
PACIFIC
CORPORATION

Yukon Pacific Corporation

1049 West 5th Avenue

Anchorage, Alaska 99501-1930, USA

PHONE: (907) 265-3100

FAX: (907) 265-3180/3190

TONY KNOWLES, GOVERNOR

DEPT. OF ENVIRONMENTAL CONSERVATION

Division of Air and Water Quality
410 Willoughby Avenue, Suite 105
Juneau, Alaska 99801-1795

Director's Office: (907) 465-5100
Fax: (907) 465-5129
TTY: (907) 465-5010

VIA FEDERAL EXPRESS
YPC ACCOUNT #1135-7199-3

August 5, 1997

Mr. Michael Smith
Environmental and Regulatory Affairs, Alaska
Yukon Pacific Company
1049 W. 5th Avenue
Anchorage, AK 99501

Re: Final Decision–Construction Permit No. 9771-AC003 and Conclusive Consistency Determination of YPC's Anderson Bay Liquefied Natural Gas Plant and Marine Terminal

Dear Mr. Smith:

Based upon our review, the Department grants and encloses Air Quality Control Construction Permit No. 9771-AC003 in accordance with 18 AAC 50.315-.320 and AS 46.14.170(a)(1), and finds the Air Quality Control Construction Permitting phase of the project consistent with the Alaska Coastal Management Program (ACMP), in accordance with 6 AAC 50.120 and AS 44.19.145(a).

In response to public comments received, we revised the permit and technical analysis report. On July 28, 1997, we submitted our response to comments, draft final technical analysis report, and permit, to Ward Whitmore of YPC, commentators, and agency project reviewers.

On July 28, 1997, during a teleconference in reference to the draft final documents, Mr. Whitmore suggested twelve minor revisions of the draft final permit and seven minor revisions of the technical analysis report. The Department has concurred with eleven suggested permit revisions and all of the technical analysis revisions in the enclosed deliberations. The Department has also enclosed replacement pages 36, 59, 90, 96, 102, 103, 114, and the Appendix A spreadsheet for the Technical Analysis Report.

Permit conditions are stipulated pursuant to the ACMP Regulations 6 AAC 50, and Air Quality Control Regulations 18 AAC 50, and are necessary to ensure that operation of your facility is consistent with the applicable regulations. This permit does not relieve you from the responsibility to apply for any other permit or approval required by other government agencies.

When making waste management decisions, you are requested to consider pollution prevention techniques in order to prevent and minimize present and future pollution. Please consider waste management options which: 1) minimize pollution entering the air, land, and water; and 2) promote waste management practices in the following order of priority: source reductions, recycling/reuse, treatment, and disposal.

Please note that EPA has not delegated Federal New Source Performance Standards (NSPS) to the State. Please continue to submit NSPS information to EPA.

Department regulations provide that if you disagree with this decision, you may request an adjudicatory hearing in accordance with 18 AAC 15.200-910. The request should be mailed to the Commissioner, Alaska Department of Environmental Conservation, 410 Willoughby Avenue, Suite 105, Juneau, Alaska 99801-1795, by certified mail, return receipt requested. A copy of the request shall also be sent to the undersigned. Failure to submit a request within thirty days of service of this letter shall constitute a waiver of your right to administrative review of the decision.

In addition, any other person who disagrees with this decision may request an adjudicatory hearing within thirty days of service of the enclosed permit. Any hearing granted will be limited to issues related to this permit. If an adjudicatory hearing is thereafter granted, all permit conditions remain in full force and effect.

Please call Jim Baumgartner at (907) 465-5100, if you have any questions regarding our permit decision

Sincerely,

James Baumgartner for

John M. Stone, Chief
Air Quality Maintenance Section

JMS/JB/pal (p:\construc\psd\ypc\final\appltr.fnl)
Enclosures: Final Air Quality Control Construction Permit No. 9771-AC003
Technical Analysis Report replacement pages
Response to July 28, 1997 comments

cc: (w/encls.)
Judy Kitigawa, ADEC, Drawer 1709, Valdez, AK 99686
Molly Birnbaum, Anchorage Joint Pipeline Office, M/S 1000
David Dengel, City of Valdez, P.O. Box 307, Valdez, AK 99686
Mike Macey, TAGS ERC, 750 W. 2nd Avenue, Suite 104, Anchorage, AK 99503

cc: (cont.)
John Devins, RCAC, 750 W. 2nd Avenue, Suite 100, Anchorage, AK 99501
John Lague, Dames and Moore, 9665 Chesapeake Dr., Suite 301, San Diego CA 92123
Linda Medeiros, DNR/DOL, Anchorage
Maureen McCrea, DGC, Anchorage
Bob Dolan, ADEC/WDG, Anchorage
Don McKay, DF&G/Habitat, Anchorage
Myron Chaitoff, ADEC/AQM, Anchorage
Bonnie Thie, EPA Region 10, Seattle

ALASKA DEPARTMENT OF ENVIRONMENTAL CONSERVATION
AIR QUALITY CONSTRUCTION PERMIT

Permit No. 9771-AC003 Date: **FINAL PERMIT August 5, 1997**

The Department of Environmental Conservation, under the authority of AS 46.03, AS 46.14, 18 AAC 50, 18 AAC 15, and 6 AAC 50, issues an Air Quality Control Construction Permit to:

Permittee

YUKON PACIFIC COMPANY LIMITED PARTNERSHIP
1049 West 5th Avenue
Anchorage, Alaska 99501

Facility

YPC Anderson Bay Liquefied Natural Gas Plant and Marine Terminal
UTM Coordinates, Northing 6772 km, Easting 526 km
Anderson Bay, Alaska

The Department authorizes YPC to construct a new facility in accordance with the terms and conditions of this permit, and as described in the original permit application and subsequent submittals listed in Exhibit C. This permit also authorizes YPC to operate the facility as provided by AS 46.14.120.

James Baumgartner for 5 AUGUST 1997

John M. Stone, Chief Date
Air Quality Maintenance Section

PERMIT TERMS AND CONDITIONS

I. Standard Permit Conditions

A. The Permittee shall comply with each permit term and condition; noncompliance constitutes a violation of AS 46.14, 18 AAC 50, and the Clean Air Act and is grounds for

1. An enforcement action;

2. Permit termination, revocation and reissuance, or modification in accordance with as 46.14.280; or

3. Denial of an operating permit application.

B. It is not a defense in an enforcement action to claim that it would have been necessary to halt or reduce the permitted activity in order to maintain compliance with a permit term or condition.

C. Each permit term or condition is independent of the permit as a whole and remains valid regardless of a challenge to any other part of the permit;

D. Compliance with the permit terms and conditions is considered to be compliance with those requirements that are

1. Included and specifically identified in the permit; or

2. Determined in writing in the permit to be inapplicable.

E. The permit does not convey any property rights of any sort, nor any exclusive privilege.

F. The Permittee shall allow an officer or employee of the Department, or an inspector authorized by the Department, upon presentation of credentials and at reasonable times, with the consent of the owner or operator, to

1. enter upon the premises where a source subject to the construction permit is located or where records required by the permit are kept;

2. have access to and copy any records required by the permit;

3. Inspect any facilities, equipment, practices, or operations regulated by or referenced in the permit; and

4. sample or monitor substances or parameters to assure compliance with the permit or other applicable requirements.

G. The Permittee shall furnish to the Department, within a reasonable time, any information the Department requests in writing to determine whether cause exists to modify, revoke and reissue, or terminate the permit, or to determine compliance with the permit; upon request, the permittee shall furnish to the Department copies of records required to be kept; the Department, in its discretion, will require the permittee to furnish copies of those records directly to the federal administrator.

II. Standard Record Keeping, Reporting, and Testing Conditions

A. The Permittee shall certify all reports, compliance certifications, or other documents submitted to the Department under this permit as required by 18 AAC 50.205.

B. The Permittee shall submit test plans, reports, certifications, and notices required under this permit to the Department's Air Quality Maintenance Section, Compliance Assurance Group, 410 Willoughby Avenue, Suite 105, Juneau, AK 99801-1795, telephone (907) 465-5022, facsimile (907) 465-5129. Permittee shall submit a copy of test plans, reports, and notices to the Trans Alaska Gas System (TAGS) Environmental Review Committee (ERC), 750 W. 2nd Avenue, Suite 104, Anchorage, AK 99503.

C. The Permittee shall keep records of required monitoring data and support information for at least five years after the date of the collection; support information includes calibration and maintenance records, original strip-chart recordings for continuous monitoring instrumentation, and copies of reports required by this permit. The Permittee shall keep monitoring and compliance records as required by the Clean Air Act and applicable federal regulations.

D. The Permittee shall conduct source testing as requested by the Department, required by this permit, and 18 AAC 50.220. The Permittee shall comply with all applicable federal requirements, and shall

1. use the applicable test methods set out in 40 CFR Part 60, Appendix A, and 40 CFR Part 61, Appendix B, to ascertain compliance with applicable standards and permit requirements;

   a. The Permittee shall conduct source tests of unit exhausts and report the results as described. The Permittee may propose alternative test methods if it can be shown to be of equivalent accuracy, and will ensure compliance with the applicable standards or limits. Alternative test procedures must be approved by the Department prior to the test date.

(1) Nitrogen Oxides, NO_X, expresses as NO_2 (ppm, lb/MMBtu, and lbs/hr): Reference Method 7E or Method 20 specified in 40 CFR, Part 60, Appendix A.
(2) Oxygen, O_2 (percent): Reference Method 3 or 3A as specified in 40 CFR, Part 60, Appendix A.
(3) Stack Velocity and Volumetric Flow Rate: Reference Methods 1-4 as specified in 40 CFR, Part 60, Appendix A.
(4) Particulate Matter (grains/dscf, lb/MMBtu, and lb/hr): Reference Method 5 as specified in 40 CFR, Part 60, Appendix A.
(5) Sulfur dioxide (SO_2) (ppm, lb/MMBtu, and lbs/hr) Reference Method 6 or 6C as specified in 40 CFR, Part 60, Appendix A.
(6) Visible Emission Surveillance (Percent): Reference Method 9 as specified in 40 CFR, Part 60, Appendix A.

2. submit to the Department, within 60 days after receiving a request and at least 30 days before the scheduled date of the tests, a complete plan for conducting the source tests;

3. give the Department written notice of the tests 10 days before each series; and

4. within 45 days after completion of the set of tests, submit the results, to the extent practical, in the format set out in *Source Test Report Outline* in Volume III, Section IV.3, of the State Air Quality Control Plan, adopted by reference in 18 AAC 50.030(8).

E. The Permittee shall: calibrate; conduct applicable continuous monitoring system performance tests listed in 40 CFR 60, Appendix B, and certify test results; operate; and, maintain air contaminant emissions and process monitoring equipment on the sources as described herein and in documents provided by the Permittee, listed in Exhibit C. The applicant shall submit monitoring equipment siting, operation, and maintenance plans and procedures for approval by the Department.

For continuous emission monitoring systems, the Permittee shall comply with each applicable monitoring system requirement, as listed in 40 CFR 60.13, 60.19, the applicable subpart as incorporated by reference in Condition V, 40 CFR 60, Appendix F, and the *EPA Quality Assurance Handbook For Air Pollution Measurements*, EPA/600 R-94/038b. The Permittee shall attach to the Facility Operating Report required by Condition II.G, a copy of each continuous emission monitoring system data assessment report for Quality Assurance Procedures conducted in accordance with 40 CFR 60, Appendix F.

F. The Permittee may seek Department approval of alternates to the monitoring, record keeping, and reporting requirements of this permit by submitting a written request to the Department. Until such time as the Department approves an alternative of a monitoring, record keeping, or reporting requirement, the Permittee shall comply with the requirements listed in this permit.

G. Permittee shall submit **two** copies of a quarterly Facility Operating Report, as described in Exhibit B of this permit, to the Department by January 30th, April 30th, July 30th, and October 30th, each year for operations during the preceding calendar quarter.

H. Permittee shall report all excess emissions, meaning those emissions that exceed permit conditions or State and federal emission standards, to the Department as follows:

1. Upon discovery of any excess emission in quantity or duration that are potentially injurious to human health, immediately notify the Department's Spill Prevention and Response (SPAR) Division. Additionally, the Permittee shall send by facsimile a completed and signed " Excess Emission Notification Form," found in Exhibit D, to the Department within 24 hours of the discovery of the excess emission.

SPAR can be reached at the following numbers:

Central Alaska	269-7500	FAX 269-7648
Northern Alaska	451-2121	FAX 451-2362
Southeast Alaska	465-5340	FAX 465-2237

2. For excess emissions that do not fall in the above category, send by facsimile a completed and signed "Excess Emissions Notification Form," found in Exhibit D, to the Department at (907) 465-5129, within 24 hours of discovery of the excess emission.

I. The Permittee shall clearly display the cover page of this permit, and keep a copy of this permit, the State Air Quality Control Regulations 18 AAC 50, and Alaska Statutes 46.14, at the permitted facility location after on-site construction commences.

J. The Permittee shall operate each source in compliance with the applicable emission standards specified by 18 AAC 50.040-.070, by an applicable federal New Source Performance Standard (NSPS) or National Emission Standard for Hazardous Air Pollutants (NESHAP), by limits established as the result of a BACT or LAER determination, or the requested emission limits.

III. Standard Operating Conditions

The Permittee shall develop and implement standard operating and maintenance procedures for each source listed in Exhibit A of this permit, and shall keep a copy of the procedures available at a location within the facility that is readily accessible to operators of the equipment and to authorized representatives of the Department.

IV. Ambient Air Quality Standards and Increments

The Permittee shall not interfere with the attainment or maintenance of the Ambient Air Quality Standards listed in 18 AAC 50.010, and shall not cause or contribute to a violation of the maximum allowable ambient concentrations (the PSD increments) listed in 18 AAC 50.020 as follows:

A. Construct and operate the facility in accordance with the application and subsequent submittals listed in Exhibit C of this permit.

B. The Permittee shall burn distillate fuel oil with no greater than 0.25% sulfur by weight in all construction generators, Source Nos. C1-C25, and all non-road engines used during the construction and operation of the facility.

C. Prior to making any change at the facility that deviates from the application and subsequent submittals listed in Exhibit C, such as changes in equipment size, configuration, or location, Permittee shall notify the Department and the TAGS ERC. The Permittee shall ask the Department if additional ambient impact assessment modeling is warranted for the proposed change. Within 180 days upon receiving written Department notice that modeling is warranted, the Permittee shall prepare an ambient impact assessment for the specified air contaminant and averaging period. The Permittee shall not make the change until the Department concurs the change will not interfere with attainment or maintenance of ambient standards and increments;

D. The Permittee shall operate, maintain, and calibrate one particulate matter contaminant monitoring station during the construction stage of the project, and no later than 180 days after the Permittee breaks ground for construction. The station must be sited within the zone of maximum predicted particulate matter (PM_{10}) impact for which YPC's Anderson Bay facility has a significant contribution, or as otherwise approved by the Department. The station must be operated, maintained, and calibrated as follows:

1. The Permittee shall submit to the Department, for approval, an ambient monitoring plan for particulate matter (PM_{10}) prepared in accordance with *Alaska Quality Assurance Manual for Ambient Air Quality Monitoring*, dated August 1996. The

plan will identify the monitoring site and rationale for site selection, and will be submitted not later than 60 days prior to breaking ground. This plan will also define the construction activities.

2. The Permittee shall equip the station to measure 24-hr PM-10 once each day during periods of construction activity; a collocated PM-10 sampler to obtain a duplicate precision sample once per week; an anemometer; and a wind direction indicator with meteorological data recording equipment.

3. The Permittee shall operate the station in accordance with the procedures specified in the *Alaska Quality Assurance Manual for Ambient Air Quality Monitoring*, dated August 1996.

4. The Permittee shall operate the station to obtain a minimum of 80% data capture per calendar quarter for all parameters measured.

5. The Permittee shall submit within sixty days after the end of each calendar quarter to the Department an ambient monitoring report summarizing monitoring data collected during the calendar quarter. The Permittee shall include quarterly monitoring system quality assurance/quality control or calibration audit results as part of the report.

V. Federal Emission Standards adopted by reference in 18 AAC 50.040

The Permittee shall comply with the requirements of 40 CFR 60, New Source Performance Standards (NSPS), and 40 CFR 61, National Emission Standards for Hazardous Air Pollutants (NESHAP), as they apply to the equipment specified below. The Permittee shall submit a copy of all NSPS and NESHAPS reporting to the U.S. EPA Region 10 and the Department as required by the applicable Federal standards. The Permittee may attach periodic federal reporting to the Facility Operating Report required by Condition II(G). The Permittee shall notify the Department of any U.S. Environmental Protection Agency (EPA) granted waivers of NSPS or NESHAP emission standards, record keeping, monitoring, performance testing, or reporting requirements within 30 days after the Permittee receives a waiver.

A. 40 CFR. 60, Subpart A. All NSPS-affected facilities at the Anderson Bay terminal, except for the Volatile Organic Liquid Storage Tanks exempted under 40 CFR 60.110b(b), Subpart Kb. In accordance with 40 CFR 60, Subpart A, 40 CFR 61, Subpart A, and 18 AAC 50.040, for each construction, modification, or reconstruction of sources regulated under 40 CFR 60 and 61, the Permittee shall notify the Department and EPA of anticipated beginning construction date, initial equipment start-up date, actual equipment start-up date, and performance test date, and submit all

information required under 40 CFR 60.6-60.8, 60.11-13, 60.14-19, 40 CFR 61.07 and 61.09-61.14.

B. 40 CFR 60, Subpart Db, Source 36

1. Applicability and delegation of authority, 40 CFR 60.40b(a). Affected facilities are steam generating units that commence construction, modification, or reconstruction after June 19, 1984, and have a heat input capacity from fuels burned in the generating unit of greater than 29 MW (100 MMBtu/hr).

2. Standard for Sulfur Dioxide, 40 CFR 60.42b(j) for very low sulfur fuel oil. No sulfur dioxide standard applies while burning natural gas. The Permittee shall use natural gas fuel with a hydrogen sulfide content of less than 4 ppm and liquid fuels with a sulfur content of no greater than 0.25% sulfur content by weight to comply with Standards for sulfur dioxide.

3. Standard for Particulate Matter, 40 CFR 60.43b(b) and 60.43b(f). The Permittee shall use only natural gas fuel and back-up distillate fuel oil to comply with this requirement.

4. Standard for Nitrogen Oxides, 40 CFR 60.44b(a)(1)(ii). The Permittee shall install, maintain, and operate Low NO_X burners to comply with this requirement.

5. Compliance and performance test methods and procedures for sulfur dioxide, 40 CFR 60.45b(j). The Permittee burns very low sulfur fuel (no more than 0.5% sulfur), therefore is exempt from compliance and performance testing requirements if the permittee obtains fuel receipts as described in 40 CFR 60.49(r).

6. Compliance and performance test methods and procedures for particulate matter and nitrogen oxides, 40 CFR 60.46b. The particulate matter emission standards and opacity limits under 40.43b apply at all times, except during periods of start-up, shut-down, or malfunction. The nitrogen oxides emission standards under 60.44b apply at all times.

   a. to determine compliance with the particulate emission limits and opacity limits under 60.43b, the owner or operator shall conduct an initial performance test as required under 60.8 (Subpart A) using the reference methods listed in 60.46b(d)(7) (Method 9) for opacity and 60.46b(d)(1)-(6) for particulate emissions.
   b. The permittee shall determine compliance with the emission limit for nitrogen oxides using procedures listed in 40 CFR 60.46b(e)(1) and (e)(4).

7. Emission monitoring for sulfur dioxide, 40 CFR 60.47b. The permittee is exempt from the monitoring as specified in 40 CFR60.47b(f), if the owner collects fuel receipts in accordance with 40 CFR 60.49b(r).

8. Emission monitoring for particulate matter and nitrogen oxides, 40 CFR 60.48b. The Permittee shall install, calibrate, operate, and maintain continuous emission monitoring systems for particulate and nitrogen oxide emissions as listed in 60.48b(a) and (g)(1), respectively. The Permittee may monitor operating conditions to predict nitrogen oxide emissions as specified in a plan submitted to the EPA and Department pursuant to 60.49b(c), in lieu of continuous NO_x monitoring.

9. Reporting and record keeping requirements, 40 CFR 60.49b. The permittee shall comply with the requirements listed in 40 CFR 60.49b(a)-(d), (g), (h), and (k). The permittee shall report fuel sulfur content as required under 60.49b(r).

C. 40 CFR 60, Subpart Dc; Source No. 38b--Duct Burner

1. Applicability and delegation of authority, 40 CFR 60.40c. An affected facility is a steam generating unit which commenced construction, modification, or reconstruction after June 9, 1989, and has a maximum design heat capacity between 10 and 100 MMBtu/hr.

2. Standard for sulfur dioxide, 40 CFR 60.42c. The Permittee shall comply with the sulfur dioxide standard listed in 40 CFR 60.42c(d) while burning fuel oil. The affected facility is classified under 40 CFR 60.42c(h)(1), therefore the permittee may determine compliance with the standard based on a fuel oil sulfur content certification from the supplier as described in 40 CFR 60.48c(f)(1). The Permittee shall comply with the standard by using natural gas primarily with a hydrogen sulfide content limitation of less than 4 ppm and back-up distillate fuel oil with no greater than 0.25% sulfur content by weight.

3. Standard for particulate matter, 40 CFR 60.43c. The Permittee shall comply with the opacity standard listed in 40 CFR 60.43c(c) at all times except during periods of start-up, shut-down, or malfunction.

4. Compliance and performance test methods and procedures for sulfur dioxide, 40 CFR 60.44c. The permittee shall obtain fuel oil sulfur supplier certification in accordance with 40 CFR 60.44c(h) certification procedures as described in 60.48c(f)(1), (2), or (3).

5. Compliance and performance test methods and procedures for particulate matter, 40 CFR 60.45c. The permittee shall conduct performance tests as required in 40 CFR 60.45c(a)(7).

6. Emission monitoring for sulfur dioxide, 40 CFR 60.46c. Under 40 CFR 60.46c(e), the Permittee is exempt from continuous emission monitoring listed in (a) and (d). The Permittee shall demonstrate compliance based upon the fuel supplier certification as described under 40 CFR 60.48(f)(1)-(3).

7. Emission monitoring for particulate matter, 40 CFR 60.47c. The permittee is exempt from the monitoring requirement as the affected facility will not burn residual oil, coal, or wood.

8. Reporting and record keeping requirements 40 CFR 60.48c.

   a. The permittee shall include in the construction notification required under 40 CFR 60.7, the information listed in 40 CFR 60.48c(a).

   b. The Permittee shall submit to the Department a copy of the performance test data from performance tests and continuous emission monitoring performance evaluations required under 40 CFR 60.48c(b).

   c. The permittee shall attach to the Facility Operating Report required under Condition II.G quarterly reports required under 40 CFR 60.48c(d), (e) and (f).

   d. The permittee shall record and maintain records of the amounts of each fuel combusted during the day as required by 60.48c(g).

D. 40 CFR 60, Subpart Kb, Fuel oil storage tanks--No ID Numbers identified.

1. Applicability and designation of affected facility, 40 CFR 60.110b. Volatile organic liquid storage tanks greater than 40 cubic meters in volume are subject to this Subpart as listed in 40 CFR 60.110b(a).

2. Standard for volatile organic compounds (VOC), 40 CFR 60.112b. The storage tanks are exempt from 40 CFR 60.112b, provided the Permittee stores liquids with a true vapor pressure less than 3.5 kilopascals (kPa).

3. Testing and procedures, 40 CFR 60.113b. The storage tanks are exempt from 40 CFR 60.113b, provided the Permittee stores liquids with a true vapor pressure less than 3.5 kilopascals (kPa).

4. Reporting and record keeping requirements, 40 CFR 60.115b. The storage tanks are exempt from 40 CFR 60.115b, provided the Permittee stores liquids with a true vapor pressure less than 3.5 kilopascals (kPa).

5. Monitoring of operations, 40 CFR 60.116b.

   a. Pursuant to 40 CFR 60.116b(a) and (b), the permittee shall keep readily accessible records showing the dimension of the storage vessels and an analysis showing the capacity of the storage vessel for each storage tank greater than equal to 40 cubic meters.

   b. For tanks greater than or equal to 75 cubic meters, the permittee shall submit to the Department a copy of the thirty-day notification required by 40 CFR 60.116b(d); and the permittee shall determine the vapor pressure in accordance with 40 CFR 60.116b(e)(1) and (2)(i).

E. 40 CFR 60, Subpart GG; Source Nos. 1-5, 8-12, 15-19, 22-26, 33-35, 38a, and 39-44, Gas Turbines.

1. Applicability and designation of affected facilities, 40 CFR 60.330. Affected units are all stationary gas turbines with a heat input at peak load equal to or greater than 10.7 gigajoules per hour based on low heating value as described in 40 CFR 60.330(a) and (b).

2. Standard for nitrogen oxides, 40 CFR 60.332. Each gas turbine is as classified in 40 CFR 60.332(d). Except as provided for in 40 CFR 50.332(k), the Permittee shall comply with the nitrogen oxides new source performance standard listed in 40 CFR 60.332(a)(2) of 150 ppmv, corrected for heat rate, fuel bound nitrogen, and 15% oxygen by using low NO_x burners and limit emissions to 25 ppmv NOx, corrected to 15% oxygen while burning natural gas, and 125 ppmv NOx, corrected to 15% oxygen while burning distillate fuel oil.

3. Standard for sulfur dioxide, 40 CFR 60.333. The Permittee shall comply with the sulfur dioxide new source performance limitation listed in 40 CFR 60.333(a) or (b) of 150 ppm or 0.8% sulfur content by weight. The permittee shall comply with these requirements by burning primarily natural gas with a hydrogen sulfide content of less than or equal to 4 ppm, and burning distillate fuel oil with a sulfur content that does not exceed 0.25% fuel sulfur by weight.

4. Monitoring of operations, 40 CFR 60.334. The permittee shall comply with 40 CFR 60.334(b) to monitor the sulfur and nitrogen content of the gas turbine fuel. The permittee shall record natural gas sulfur and nitrogen content daily or

develop a custom schedule to test fuel as specified in 40 CFR 60.334(b)(2). The permittee shall include with reports submitted under 40 CFR 60.7(c), information as listed in 40 CFR 60.334(c), (c)(2) and (c)(4).

5. Test methods and procedures, 40 CFR 60.335.

   a. To compute nitrogen oxides emissions, the permittee shall use analytical methods and procedures as required by 40 CFR 60.335(a).

   b. The permittee shall conduct performance tests in accordance with Condition II.D as required in 40 CFR 60.335(b), or alternative test methods in accordance with 40 CFR 60. 335(f).

   c. The permittee shall determine compliance with the nitrogen oxides and sulfur dioxide standards listed in 40 CFR 60.332(a)(2) and 60.333(a), respectively, by using methodology contained in 40 CFR 60.335(c). The permittee shall determine compliance with the sulfur dioxide standard listed in 40 CFR 60.333(b) by using methodology as described in 40 CFR 60.335(d).

   d. The permittee may use a third party in accordance with 40 CFR 60.335(e) to determine fuel nitrogen and sulfur content.

   e. The permittee may follow 40 CFR 60.335(f)(1) to propose an alternative to the reference methods.

F. 40 CFR 60, Subpart KKK.

1. Applicability and designation of affected facility, 40 CFR 60.630. The Anderson Bay facility is an onshore natural gas processing plant and subject to this Subpart per 40 CFR 60.630(a)(1)-(e). Each pump, pressure relief device, open-ended valve or line, valve compressor and flange, or other connector in VOC or wet gas service, and each device or system required under 40 CFR 60, Subpart KKK.

2. Standards, 40 CFR 60.632. The permittee shall comply with the requirements of 40 CFR 60.482-1(a), (b), (d), and 60.482-2 through 10. The Permittee may elect to comply with 40 CFR 60.483-1 and 483-2. The Permittee shall comply with 40 CFR 60.485, except as provided for in 40 CFR 60.633(f). Permittee shall comply with 40 CFR 60.486 and 60.632(f), except as provided for in 40 CFR 60.633, 60.635, and 60.636.

3. Alternative means of emission limitation, 40 CFR 60.634. The permittee may apply to the federal administrator for permission to use an alternative means of emission limitation in accordance with 40 CFR 60.632(c) and 60.634.

4. Record keeping requirements, 40 CFR 60.635. The Permittee shall comply with record keeping requirements listed in 40 CFR 60.635 and 60.486.

5. Reporting, 40 CFR 60.636. The Permittee shall report in accordance with 40 CFR 60.487, 60.636(b) and (c). In lieu of submitting a separate report to the Department, the Permittee may attach each semi-annual onshore natural gas processing plant report to the facility operating report required by Condition II.G.

G. 40 CFR 61, Subpart E, Source No. 37.

1. Applicability, 40 CFR 61.50. The fluidized bed incinerator is a stationary source subject to the National Emission Standard for Mercury, as it will incinerate wastewater treatment plant sludges.

2. Emission standard, 40 CFR 61.52. The Permittee shall comply with the mercury emission standard listed in 40 CFR 61.52(b). Emissions to the atmosphere from the sludge incinerator shall not exceed 3,200 grams of mercury (Hg) per 24-hour period. The Permittee shall comply with this standard by burning no greater than 25 lbs/hr biological solids from the treatment plant.

3. Stack sampling, 40 CFR 61.43. Unless the Permittee has obtained a waiver in accordance with 40 CFR 61.13, the Permittee shall comply with the emission testing provisions of 40 CFR 61.53(d). The Permittee shall stack test Source 37 using Method 101A in 40 CFR 61, Appendix B, per 40 CFR 61.53(d)(2) within 90 days of the start-up date.

   a. The permittee shall notify the EPA and DEC at least 30 days prior to the test.

   b. The permittee shall take samples as described in 40 CFR 61.53(d)(4), over such a period as necessary to determine accurately the maximum emissions which will occur in a 24-hour period. The Permittee shall not make any operational changes which would increase emissions above levels of their most recent stack test.

   c. The Permittee shall analyze all samples within 30 days after the stack test and shall notify the EPA and Department by a registered letter dispatched within 15 days of the determination per 40 CFR 61.53(d)(5).

4. Sludge sampling, 40 CFR 60.54. As an alternative means for demonstrating compliance, the Permittee may sample the sludge in accordance with the provisions of 40 CFR 61.54.

   a. The permittee shall sample the sludge from the wastewater treatment facility using Method 105 described in 40 CFR 61, Appendix B. The Permittee shall conduct the sludge tests within 90 days of unit start-up per 40 CFR 61.54(a)(2).

   b. The permittee shall notify the EPA and Department at least 30 days prior to the tests in accordance with 40 CFR 61.54(b).

   c. The Permittee shall sample the sludge according to 40 CFR 61.54(c)(1), using Method 105, using three composite samples obtained within a 24-hour period; when 24 hours are not continuous, the sample period should not exceed 72 hours from the first grab sample. The sludge charging rate shall be determined per 40 CFR 61.54(c)(2) by using a flow rate measuring devise that can measure the mass rate of sludge charged to the incinerator with an accuracy within 5% over its operating range or alternative method approved by the EPA. The sludge analysis shall be performed per 40 CFR 61.54(c)(3) according to Method 105 in 40 CFR 61, Appendix B.

   d. The Permittee shall calculate mercury emissions using the equation contained in 40 CFR 60.54(d).

   e. The Permittee shall not change operations of the incinerator that would potentially increase emissions above the level determined by the most recent sludge test per 40 CFR 61.54(e).

   f. The Permittee shall analyze all sludge samples within 30 days after the sample is collected and notify the EPA and Department by registered letter within 15 days following the date the determination is complete per 40 CFR 61.54(f).

5. Monitoring of emissions and operations, 40 CFR 61.55. If mercury emissions exceed 1,600 grams in a 24-hour period, the Permittee shall stack test or sample sludges and report the results of these tests at least each year in accordance with 40 CFR 61.55(a).

VI. Incinerator Emission Standards

Source No. 37 and Source C22 - Incinerators

A. The Permittee shall comply with 18 AAC 50.050(a)(2), which states that visibility through the exhaust effluent of an incinerator may not be reduced by visible emissions, excluding condensed water vapor, by more than 20 percent, for a total of more than three minutes in any one hour.

B. The Permittee shall install, maintain, and operate a venturi scrubber on the Source No. 37 incinerator exhaust such that the gas side pressure drop and water flow rate are maintained at ranges recommended by the scrubber vendor. The Permittee shall limit the total waste charged to the incinerator to no greater than 999 lbs/hr, and the sludge feed rate to no greater than 25 lbs/hr.

C. The Permittee shall monitor compliance as follows and keep records of the monitoring:

1. No less than once each month, conduct a visible emission surveillance on the incinerator exhaust stack to ascertain compliance with 18 AAC 50.050(a)(2);

2. Measure or estimate the pounds of total waste and biological waste charged to the incinerator each hour; and

3. If requested by the Department, conduct additional visible emission surveillances and report the results within ten days after conducting the surveillance.

D. The Permittee shall report compliance with the incinerator visible emission standard as follows:

1. Permittee shall compile each surveillance conducted and attach the surveillance to the quarterly Facility Operating Report required under Condition II(G).

2. For additional surveillance conducted under VI(C)(3), the Permittee shall submit to the Department surveillance records within ten days after conducting the surveillance.

3. In accordance with Permit Condition II.H, the Permittee shall report any periods when the total charging rate exceeds 999 lbs/hr, or the biological solids charging rate in exceeds 25 lbs/hr.

VII. Industrial Processes and Fuel-Burning Equipment Emission Standards

Source Nos. 1-48, C1-C25, except Source Nos. 37 and C22

A. The Permittee shall comply with 18 AAC 50.055(a)(1) and 18 AAC 50.055(b)(1), which state that visible emissions, excluding condensed water vapor, from an industrial

process or fuel-burning equipment may not reduce visibility through the exhaust effluent by greater than 20 percent, for a total of more than three minutes in any one hour, and particulate matter emitted from an industrial process or fuel-burning equipment may not exceed, per cubic foot of exhaust gas corrected to standard conditions and averaged over three hours, 0.05 grains, respectively.

B. The Permittee shall comply with 18 AAC 50.055(c), which states that sulfur compound emissions, expressed as sulfur dioxide, may not exceed 500 ppm averaged over a period of three hours. The Permittee shall ensure compliance with this requirement by using only:

1. natural gas fuel with a hydrogen sulfide content not to exceed 4 ppm; or

2. distillate fuel oil with a fuel sulfur content not to exceed 0.25 percent by weight.

C. The Permittee shall monitor compliance as follows, and keep records of the monitoring:

1. No less than once each month, conduct visible emission surveillances on the exhaust stacks of each combustion turbine, internal combustion engine, or boiler operated in excess of 240 hours during the past 12 months to ascertain compliance with 18 AAC 50.055(a)(1);

2. Install, operate, and maintain a continuous opacity monitoring system to monitor the visible emissions of Source No. 36 in accordance with Permit Condition V(B)(8);

3. Upon Department request, conduct particulate matter emission tests or visible emission surveillances as set out in Permit Condition II(D);

4. Obtain a sulfur analysis of each shipment of distillate fuel oil delivered to the facility using the test methods listed in the latest version of ASTM 2880 or D396; or obtain a vendor certification that each shipment of distillate fuel delivered to the facility does not exceed 0.25 percent sulfur by weight.

5. Measure the hydrogen sulfide content of representative samples of the natural gas no less than once a month using the test methods in the latest version of ASTM D1072, D3031, D4084, or D3246, or an alternative method approved by the Department; and

6. Measure the amount of fuel consumed in each source. The fuel use may be measured by calculations approved by the Department. Fuel meters, if used, must be calibrated and certified to be accurate to ±5%; submit a copy of the

manufacturer's certification of accuracy for each fuel meter within 90 days after installation.

D. Reporting:

1. Permittee shall compile each surveillance conducted under Condition VII(C)(1), and attach the surveillance to the quarterly Facility Operating Report required under Condition II(G).

2. If requested by the Department under Condition VII(C)(3), the permittee shall submit to the Department visible emission surveillance records within ten days after conducting the surveillance.

3. Submit a copy of the fuel meter(s) certification, for meters installed in accordance with VII(C)(6).

4. List in the Quarterly Facility Operating Report under Condition II(G):

   a. the sulfur content of each shipment of diesel fuel received or, if permittee elects to document fuel sulfur content by means of vendor certification as set out in VII(C)(4), attach the vendor certification.

   b. the monthly natural gas fuel hydrogen sulfide content measured in accordance with VII(C)(5). Distillate Fuel Oil Quality: Sulfur content (in weight percent) of each sample covering one or more distillate fuel oil shipments received. List the name of the supplier of each shipment. Report any change in the type of fuel, test method, or analysis performed. Attach a copy of analyses.

   c. For each group of fuel burning equipment sources, the monthly fuel usage, and annual fuel usage during the preceeding 12 calendar months.

VIII. Marine Vessel Visible Emissions Standards

A. The Permittee shall comply with 18 AAC 50.070, which states that visible emissions, excluding condensed water vapor, may not reduce visibility through the exhaust effluent of a marine vessel by more than 20 percent, except as follows:

1. While at berth or anchor, visibility may be reduced by up to 100 percent for periods aggregating no more than:

   a. Three minutes in any one hour; and

b. An additional three minutes after initial start-up of a diesel-driven vessel;

2. During the hour immediately after weighing anchor or casting off, visibility may be reduced under one, but not both, of the following options:

   a. Visibility may be reduced by up to 40 percent for that entire hour; or

   b. Visibility may be reduced by up to 100 percent for periods aggregating no more than nine minutes during that hour;

3. During the hour immediately before the completion of all maneuvers to anchor or make fast to the shore, visibility may be reduced under one, but not both, of the following options:

   a. Visibility may be reduced by up to 40 percent for the entire hour; or

   b. Visibility may be reduced by up to 100 percent for periods aggregating no more than nine minutes during that hour; and

4. At any time not covered under (1)-(4) of this requirement, visibility may be reduced by up to 100 percent for periods aggregating no more than three minutes in any one hour.

B. The Permittee shall monitor compliance as follows and keep records of the monitoring: For each tanker vessel call at the Anderson Bay Facility, conduct no less than one visible emission surveillance.

C. Reporting: The Permittee shall notify the Department in accordance with Permit Condition II(H), of any violation of the visible emission standard.

IX. Air Pollution Prohibited

The Permittee shall comply with 18 AAC 50.110, which states that no person may permit any emission which is injurious to human health or welfare, animal or plant life, or property, or would unreasonably interfere with the enjoyment of life or property.

A. To comply with this requirement, the Permittee shall:

1. Take reasonable actions to address air pollution complaints resulting from emissions at the facility; and

2. Install, maintain, and operate, in accordance with standard operating procedures, fuel-burning equipment, process equipment, emission control devices, and testing equipment and monitoring equipment to provide a balanced control of air contaminant emissions during all operating periods.

3. Keep a log of all public complaints received regarding air emissions and the Anderson Bay Facility, including the date, time, and nature of complaint. Attach a copy of the complaint log to the facility operating report required by Condition II(G).

X. Best Available Control Technology (BACT) - 18 AAC 50.315(e)(3)(A)

A. The Permittee shall install, maintain, and operate emission or operational controls as BACT, as follows:

1. Oxides of Nitrogen (NO_X) BACT Limits

a. The Permittee shall install, maintain, and operate Low NOx combustors on all combustion turbines and comply with NOx emission limits not to exceed 25 ppmvd corrected to 15% oxygen for Source Nos. 1-5, 8-12, 15-19, 22-26, 33-35, 38, 39, and 40-44 while burning natural gas; and not to exceed 125 ppmvd corrected to 15% oxygen for Source Nos. 38a and 39 while burning distillate fuel oil.

b. The Permittee shall install, operate, and maintain low NOx burners on Source Nos. 6, 13, 20, 27, 36, and 38b. Permittee shall comply with a BACT emission limit of 0.10 pounds of NOx per MMBtu for units 36 and 38b, while firing natural gas. Permittee shall comply with a BACT emission limit of 0.14 pounds of NOx per mmBtu for units 6, 13, 20, and 27. Limits are expressed as a 30-day rolling average for sources with CEMS and "not to exceed" for sources without CEMS.

c. No NOx controls were applied to the following sources: the emergency operated units, Sources 45-48; the facility's flares, sources 7, 14, 21, 18-30, 37; or the construction sources, C1-C25.

2. Sulfur Dioxide (SO_2) BACT Limits

a. The Permittee shall burn only natural gas with a hydrogen sulfide content not to exceed 4 ppm, and no more than 0.1% pentane and heavier hydrocarbons, in Source Nos. 1-36, 38-44, except the Permittee may burn distillate fuel oil as

an alternative fuel in Source Nos. 36, 38, and 39, provided the sulfur content does not exceed 0.25% sulfur by weight.

b. The Permittee shall burn distillate fuel oil with no greater than 0.25% sulfur by weight in Source Nos. 45-48, in all construction generators, Source Nos. C1-C25 used during the construction and operation of the facility.

3. Carbon Monoxide BACT Limits: The Permittee shall comply with BACT emission limits as follows:

a. not to exceed 15 ppmvd corrected to 15% oxygen for Source Nos. 1-4, 8-11, 15-18, 22-25;

b. not to exceed 25 ppmvd corrected to 15% oxygen for Sources Nos. 5, 12, 19, 26, 33, 34, and 35;

c. not to exceed 50 ppmvd corrected to 15% oxygen for Source Nos. 38a, 38b, 39, and 40-44; and

d. not to exceed 35 lb/mmcf for Source Nos. 6, 13, 20, and 27.

e. not to exceed 5lbs/mmcf while firing natural gas, and 5lbs/1000 gallons cf distillate fuel oil for Source No. 36.

f. no controls were applied to Sources 45-48 because of their emergency operation status.

g. no controls were applied to the facility's flares, sources 7, 14, 21, 28-30, 37, and construction sources, C1-15.

4. Particulate Matter (PM) BACT Limits: The Permittee shall comply with BACT emission limits as follows:

a. Install, maintain, and operate a venturi scrubber on the incinerator, Source No. 37, such that the gas side pressure drop and the water flow rate are maintained at the levels recommended by the vendor, not to exceed 0.5 lb/hr in the exhaust gas from the incinerator, Source No. 37;

b. not to exceed 0.0069 lbs/MMBtu for Source Nos. 1-4, 8-11, 15-18, and 22-25;

c. not to exceed 0.012 lb/MMBtu for Source Nos. 5, 12, 19, 26, 33, 34, and 35;

d. not to exceed 0.20 lb/MMBtu for Source Nos. 36, 40, 41, 42, 43, and 44;

e. not to exceed 0.20 lb/MMBtu while burning natural gas, and 16.6 tpy each while burning fuel oil for Source Nos. 38a, 38b, and 39; and

f. not to exceed 1.0 tpy each for Source Nos. 6, 13, 20, and 27;

g. No controls are applied to following units to control particulate matter: the facility's flares, sources 7, 14, 21, 28, 29, and 30; and the construction equipment C1-C25.

5. Volatile Organic Compound, BACT limits:

a. The Permittee shall burn only natural gas in Source Nos. 1-35, and 40-44. The Permittee may burn distillate fuel oil or natural gas in Source Nos. 36, 38, and 39.

b. The Permittee shall comply with the Volatile Organic Compound New Source Performance Standards for on-shore natural gas processing plants incorporated by reference in Condition V(F)(2) and (3).

B. The Permittee shall monitor compliance with limits listed in Condition X(A) and keep records of the monitoring as follows:

1. NOx

a. Install, calibrate, conduct performance specification tests and certify test results, operate and maintain a NOx continuous emission monitoring system (CEMS) in accordance with Permit Condition II(E) or (F) on Source Nos. 38 and 39, and on one unit in each class of combustion turbines and heaters to represent the entire group of equipment;

b. Use emission source test results conducted under Permit Conditions II(D) and V to demonstrate compliance with limits listed in Condition X(A) for turbines, heaters, and boilers.

2. SO_2: Comply with sulfur dioxide monitoring and recording sections of Permit Condition II(E), V, and VII(C).

3. PM: Comply with particulate matter monitoring and recording sections of Permit Condition II(E), V, and VII(C).

4. VOC: Comply with volatile organic compounds monitoring and recording sections required in Condition V.

C. Reporting: Permittee shall report compliance with limits listed in Condition X(A) as follows:

1. NOx

a. The Permittee shall report the maximum 90-minute NOx emissions measured by continuous emission monitoring systems for each fuel type of combustion turbine unit monitored in the Facility Operating Report, Permit Condition II.G.

b. The Permittee shall report results of Condition V NOx emission source tests in accordance with Permit Condition II(D).

c. The permittee shall report the 30-day rolling average NOx emissions from sources 36, 38, and 39, and the one source selected as representative from the heaters, and one of the gas-fired combustion turbines in the Facility Operating Report, Permit Condition II. G.

2. SO_2: Permittee shall report compliance with limits listed in Condition X(A) as follows:

a. The permittee shall report results of Condition V SO_2 emission source tests in accordance with Permit Condition II(D).

b. The Permittee shall report fuel sulfur records as set out in Conditions V and VII(D).

3. PM: Permittee shall report compliance with limits listed in Condition X(A) as set out in Conditions II(D), V, and VII(D).

4. VOC: Permittee shall report compliance with limits listed in Condition X(A) as set out in Condition V(F).

EXHIBIT A
PERMITTED SOURCE INVENTORY

The Permittee is authorized under this permit to operate the following stationary emission sources. The design rating, capacity, or throughput is set out in this exhibit only for the purpose of aiding in the identification of the source. The Permittee must notify the Department as described in Condition IV(B) prior to selecting other equipment make, models, and size, to determine the applicability of regulatory requirements.

I. OPERATIONAL SOURCES

Source No.	ID Number	Equipment Description	Design Capacity or Rating
Group I--Natural Gas-fired Turbines			
1	A304KT-01	General Electric Frame 5	42,600hp/363.4 MMBtu/hr
2	A304KT-02	General Electric Frame 5	42,600hp/363.4 MMBtu/hr
3	A304KT-03	General Electric Frame 5	42,600 hp/363.4 MMBtu/hr
4	A304KT-04	General Electric Frame 5	42,600 hp/363.4 MMBtu/hr
8	B304KT-01	General Electric Frame 5	42,600 hp/363.4 MMBtu/hr
9	B304KT-02	General Electric Frame 5	42,600 hp/363.4 MMBtu/hr
10	B304KT-03	General Electric Frame 5	42,600 hp/363.4 MMBtu/hr
11	B304KT-04	General Electric Frame 5	42,600 hp/363.4 MMBtu/hr
15	C304KT-01	General Electric Frame 5	42,600 hp/363.4 MMBtu/hr
16	C304KT-02	General Electric Frame 5	42,600 hp/363.4 MMBtu/hr
17	C304KT-03	General Electric Frame 5	42,600 hp/363.4 MMBtu/hr
18	C304KT-04	General Electric Frame 5	42,600 hp/363.4 MMBtu/hr
22	D304KT-01	General Electric Frame 5	42,600 hp/363.4 MMBtu/hr
23	D304KT-02	General Electric Frame 5	42,600 hp/363.4 MMBtu/hr
24	D304KT-03	General Electric Frame 5	42,600 hp/363.4 MMBtu/hr
25	D304KT-04	General Electric Frame 5	42,600 hp/363.4 MMBtu/hr
5	A305KT-02	EGT Typhoon turbines	6,900 HP / 51.73 MMBtu/hr
12	B305KT-02	EGT Typhoon turbines	6,900 HP / 51.73 MMBtu/hr
19	C305KT-02	EGT Typhoon turbines	6,900 HP / 51.73 MMBtu/hr
26	D305KT-02	EGT Typhoon turbines	6,900 HP / 51.73 MMBtu/hr
33	324KT-01A	EGT Typhoon turbines	6,900 HP / 51.73 MMBtu/hr
34	324KT-01B	EGT Typhoon turbines	6,900 HP / 51.73 MMBtu/hr
35	324KT-01C	EGT Typhoon turbines	6,900 HP / 51.73 MMBtu/hr
38	331PT-01	Caterpillar-Solar Mars 90	107.5 MMBtu/hr
39	331PT-02	Caterpillar-Solar Mars 90	107.5 MMBtu/hr
40	331PT-03	Caterpillar-Solar Mars 90	107.5 MMBtu/hr
41	331PT-04	Caterpillar-Solar Mars 90	107.5 MMBtu/hr
42	331PT-05	Caterpillar-Solar Mars 90	107.5 MMBtu/hr
43	331PT-06	Caterpillar-Solar Mars 90	107.5 MMBtu/hr
44	331PT-07	Caterpillar-Solar Mars 90	107.5 MMBtu/hr

EXHIBIT A
PERMITTED SOURCE INVENTORY
(Cont.)

Source No.	ID Number	Equipment Description	Design or Rating
Group II--Gas-Fired Heaters			
6	A302H-01	Drier Reactivation heater	17.97 MMBtu/hr
13	B302H-01	Drier Reactivation heater	17.97 MMBtu/hr
20	C302H-01	Drier Reactivation heater	17.97 MMBtu/hr
27	D302H01	Drier Reactivation heater	17.97 MMBtu/hr
Group III--Distillate Fuel Oil-Fired Equipment Internal-Combustion Engines			
45	333G-02	Fresh Firewater Pump	470 bhp
46	333G-05A	Sea Firewater Pump	1660 bhp
47	333G-05B	Sea Firewater Pump	1660 bhp
48	335K-02	Air Compressor	250 bhp
Group IV--Dual Fuel-fired			
A. Steam Generating Boiler			
36	331F-02	Steam generating Boiler	164 MMBtu/hr
B. Duct Burner on Dual-Fired turbine			
38a	331PT-01	Caterpillar-Solar Mars 90	100.5 MMBtu/hr
38b	n/a	Duct Burner	88.5 MMBtu/hr
C. Distillate Fuel Oil-fired Turbines			
39	331PT-02	Caterpillar-Solar Mars 90	100.5 MMBtu/hr
Group V--Incinerator			
37	N/A	Fluidized Bed Incinerator	999 lb/hr total feed Maximum 25 lbs/hr biological sludge

EXHIBIT A
PERMITTED SOURCE INVENTORY
(Cont.)

Source No.	ID Number	Equipment Description	Design or Rating
Group VI--LNG Tankers Berths			
31	N/A	LNG tanker, Berth #1	
32	N/A	LNG tanker, Berth #2	
Group VII--Flares			
7	319F-01	Dry Process Flare Pilot	2476 lb/hr
14	319F-02	Dry Process Flare Pilot	2476 lb/hr
21	319F-03	Dry Process Flare Pilot	2476 lb/hr
28	319F-04	Dry Process Flare Pilot	2476 lb/hr
29	324F-01	Marine Flare Pilot	100 lb/hr
30	319F-05	Wet Process Flare Pilot	100 lb/hr
II. CONSTRUCTION EQUIPMENT			
C1		Cargo Dock generator	250 KW
C2		Concrete plant 1 generator	250 KW
C3		Construction office generator	150 KW
C4		Construction office generator	150 KW
C5		Concrete plant 1 generator	315 KW
C6		Crusher plant generator	565 KW
C7		LNG Tank Generator	250 KW
C8		LNG Tank Generator	250 KW
C9		LNG Tank Generator	250 KW
C10		LNG Tank Generator	250 KW
C11		LNG Train Generator	150 KW
C12		LNG Train Generator	425 KW
C13		LNG Train Generator	425 KW
C14		LNG Train Generator	425 KW
C15		Utilities Generator	360 KW
C16		Utilities Generator	500 KW
C17		Utilities Generator	500 KW
C18		Utilities Generator	500 KW
C19		Construction Camp 1 generator	800 KW
C20		Construction Camp 2 generator	800 KW
C21		Construction Camp 3 generator	800 KW

EXHIBIT A
PERMITTED SOURCE INVENTORY
(Cont.)

II. CONSTRUCTION EQUIPMENT (Cont.)

Source No.	ID Number	Equipment Description	Design or Rating
C22		Waste incinerator	999 lb/hr
C23		Construction Camp 1 LPG	n/a
C24		Construction Camp 2 LPG	n/a
C25		Construction Camp 3 LPG	n/a

EXHIBIT B
FACILITY OPERATING REPORT

Two copies of the Facility Operating Reports for each calendar quarter shall be submitted to the Department and TAGS ERC by the 30th day of January, April, July, and October each year, as required under Condition II(G) of this permit. This report shall include the following information (all quantities must be reported, even if zero):

1. Facility Identification: Name of company, facility name, location, and permit number;

2. The report date and time period covered by the report;

3. Operating time for each month: List the number of hours for each source identified in Exhibit A during the operating period.

4. Fuel consumption:

   a. for each month, list the total quantity of each fuel type burned in each source during the preceding twelve months;

   b. list the fuel burned in each source recorded by the fuel meters during the month;

   c. Include the date of most recent fuel meter calibration or replacement.

5. Permittee shall attach or include reports as listed below, unless transmitted under a separate cover to the Department in accordance with Condition II(B) and the Conditions cited below:

   Condition II(E) Continuous Emission Monitoring System Data assessment reports
   Condition V periodic federal NSPS or NESHAPS reports
   Condition V(B)(9) for NSPS Subpart Db
   Condition V(C)(8)(c) for NSPS Subpart Dc
   Condition V(E)(4) for NSPS Subpart GG
   Condition V(F)(5) for NSPS Subpart KKK
   Condition V(G)(5) for NESHAPS Subpart E
   Condition VI(D)(1) for incinerator visible emissions
   Condition VII(D)(1) for fuel-burning equipment visible emissions
   Condition VII(D)(4) for fuel burning equipment sulfur dioxide emissions
   Condition IX(C) for public complaints
   Condition X(C)(1)(a) and (c) for NOx BACT emission limit

6. Permittee shall certify the facility operating report in accordance with 18 AAC 50.205.

EXHIBIT C
PERMIT APPLICATION DOCUMENTATION

ADEC, 1997. Response to Public Notice Comments, June 9.

ADGC, 1988. Tiered Project Review letter from E. Benson (DGC) to (YPC), January 20.

YPC, 1996. Application for Air Quality Control Permit to Operate with PSD Review for the Proposed Anderson Bay Liquefied Natural Gas Plant and Marine Terminal, August 12.

YPCb, 1996. Supplemental Information submitted from YPC to DEC, October 2.

YPC, 1997. Supplemental Information submitted from YPC to DEC, March 27.

YPC, 1997. Comments regarding preliminary decision, May 7.

YPC, 1997. Comments regarding preliminary decision, May 22.

TAGS ERC, 1997. Comments regarding preliminary decision, May 23.

YPC, 1997. Comments regarding preliminary decision, May 30.

Excess Emission Notification Form

Please Note: ALL entries MUST be printed
ALL time entries in military time

(DO NOT WRITE IN THIS SPACE - FOR ADEC USE ONLY)
REPORT RCVD: mo day yr (military time)

PERMIT NUMBER:

NAME OF FACILITY

COMPANY NAME

PHYSICAL LOCATION OF FACILITY:

SOURCE NO: SOURCE DESCRIPTION:

(LAST,FIRST) NAME OF REPORTING INDIVIDUAL

REPORTER'S PHONE NUMBER

INCIDENT START: mo day yr DATE (military time) TIME

INCIDENT END: mo day yr DATE (military time) TIME

NOTE: If excess emissions incident still in progress then briefly state steps taken to end incident

Predicted Incident End: mo day yr (military time) Release Rate: _____ : _____ /hr

NATURE OF EXCESS EMISSION
(Check ALL that apply)

☐ OPACITY: _____ %

☐ BLACK SMOKE

☐ SO_x	_____	☐ Tons	☐ Pounds	☐ Cu. Ft.	☐ Cu. M	☐ Unknown Amt.
☐ Nox	_____	☐ Tons	☐ Pounds	☐ Cu. Ft.	☐ Cu. M	☐ Unknown Amt.
☐ Ammonia	_____	☐ Tons	☐ Pounds	☐ Cu. Ft.	☐ Cu. M	☐ Unknown Amt.
☐ Chlorine	_____	☐ Tons	☐ Pounds	☐ Cu. Ft.	☐ Cu. M	☐ Unknown Amt.
☐ Hydrogen Sulfide	_____	☐ Tons	☐ Pounds	☐ Cu. Ft.	☐ Cu. M	☐ Unknown Amt.
☐ Volatile Organics	_____	☐ Tons	☐ Pounds	☐ Cu. Ft.	☐ Cu. M	☐ Unknown Amt.
☐ Carbon Monoxide	_____	☐ Tons	☐ Pounds	☐ Cu. Ft.	☐ Cu. M	☐ Unknown Amt.
☐ Particulate	_____	☐ Tons	☐ Pounds	☐ Cu. Ft.	☐ Cu. M	☐ Unknown Amt.
☐ Other _____;	_____	☐ Tons	☐ Pounds	☐ Cu. Ft.	☐ Cu. M	☐ Unknown Amt.

ALL quantities calculated at standard conditions)

INJURIES: ☐ Yes ☐ No NUMBER INJURED:

Nature of Injuries:

Notifications: (Please include organization, name and phone number of individual, date and time)

Excess Emission Notification Form

Please Note: ALL entries MUST be printed

Permit Number: |_|_|_|_|_|_|_|_|_|_|_|_| INCIDENT START |_|_|_|_|_|_|_|_|_|_|_|_| mo day yr (military time) Page: 2 of: __

2a. The excess emission event was due to: (Check ALL that apply)

- ❑ STARTUP
- ❑ SHUTDOWN
- ❑ UPSET CONDITION
- ❑ SCHEDULED MAINTENANCE
- ❑ BYPASS OF CONTROL EQUIPMENT
- ❑ OTHER _____

2b. Please identify the emission standard that was exceeded. Where applicable please include the specific regulation or permit condition stating paragraph and page number.

2c. Please provide a detrailed description of the event and its cause. Include source number and description. (Use continuation sheets if necessary)

Excess Emission Notification Form

Please Note: ALL entries MUST be printed

Permit Number: |__|__|__|__|__|__|__|__|__|__|__|

INCIDENT START |__|__|__|__|__|__||__|__|__|__| mo day yr (military time)

Page: 3 of: __

2d. **Please describe in detail ALL steps taken to minimize the excess emissions.**

2e. **Please describe in detail ALL corrective action taken to restore the system to normal operation:**
(Use continuation sheets if necessary)

2f. **Please describe ALL corrective and or preventative measures taken to prevent a future occurrance of the same type of event:** (Use continuation sheets if necessary)

Based on information and belief formed after reasonable inquiry, I certify that the statements and information in and attached to this document are true, accurate, and complete.

Print Name: |__|__|__|__|__|__|__|__|__|__|__|__|__|__|__|__|__|__|

Signature: ______________________

Date: |__|__|__|__|__|__| mo day yr

38b	Diesel-fired duct burner	Low NO_x burners	0.15 lb/MMBtu
36	Gas/diesel fired boiler	Low NO_x burners	0.10 lb/MMBtu
6,13,20,27	Gas-fired heaters	Low NO_x burners	0.14 lb/MMBtu
7,14,21,28-30	Flares	Proper Operation	0.068 lb/MMBtu
37	Incinerator	Proper Operation	1.70 lbs/ton[B] 5.02 lbs/ton[C]
45, 48	Diesel-fired internal combustion engines	Proper tuning	0.031 lb/hp-hr
46, 47	Diesel-fired internal combustion engines	Proper tuning	0.024 lb/hp-hr

[A] corrected to 15% O_2 and standard operating conditions
[B] biological waste emission factor
[C] other waste emission factor

4.1.2.1 Gas-fired and Distillate-Fuel-fired Turbines

The control technologies for oxides of nitrogen emissions from gas-fired turbines currently used in the United States consist of selective catalytic reduction (SCR), selective non-catalytic reduction (SNCR), non-selective catalytic reduction (NSCR), Low NO_X burners, water or steam injection, low nitrogen content fuel, or no controls.

There are twenty-eight natural gas-fired, one dual-fuel-fired turbine that contains a heat recovery steam generation (HRSG), and one dual-fuel-fired turbine located at the facility. The two turbines operate on distillate fuel oil for operation of the facility in case of natural gas supply interruption. The applicant has identified natural-gas fired turbines with dry low NO_X combustors that emit approximately 25 ppmv of NO_X corrected to 15% oxygen. It appears that additional controls may not reduce emissions substantially. The dual-fuel-fired turbines emit 125 ppmv of NO_X.

Selective Catalytic Reduction (SCR)

Selective catalytic reduction is used to supplement reductions from steam or water injection or combustion modifications. Carefully designed SCR systems can achieve NO_X reduction efficiencies as high as 90 percent. Ammonia slip levels as low as 3 to 5 ppm have been reported, with vendor guarantees of 10 ppm available.

Table 4-3 Applicant Proposed BACT for CO

Source Nos.	Description	Control Technology	Emission Limit
1-4; 8-11; 15-18; 22-25;	Natural gas-fired turbines GE turbines	Operate per Design	15 ppmv (15% O_2)
5, 12, 19, 26, 33, 34, 35	Natural gas-fired turbines EGT Typhoon	Operate per Design	25 ppmv (15% O_2)
40-44	Natural gas-fired turbines Caterpillar Solar	Operate per Design	50 ppmv (15% O_2)
38a	Dual-fired turbines	Operate per Design	50 ppmv (15% O_2)
39	Dual-fired turbines	Operate per Design	50 ppmv (15% O_2)
38b	Dual-fired duct burner	Operate per Design	n/a
36	Gas/diesel fired boiler	Operate per Design	n/a
6,13,20,27	Gas-fired heaters	Operate per Design	35 lb/mmcf
7,14,21,28-30	Flares	Operate per Design	0.02-0.4 lb/MMBtu
37	Incinerator	Operate per Design	n/a
31,32	Gas/diesel tanker boilers	Operate per Design	n/a
45-48	Diesel-fired internal combustion engines	Operate per Design	n/a

4.3.1 Mechanisms of CO Formation

The formation of CO during combustion of fossil fuels is the result of fuel-rich non-stoichiometric combustion, also known as incomplete combustion. Stoichiometric combustion occurs under ideal conditions of time, temperature, and fuel/air mixing. At stoichiometric conditions, the exact quantity of air is present to provide for complete combustion of the fuel. In practice, to ensure adequate air is available for complete combustion, excess air is provided for combustion. Although, too much excess air may also be uneconomical (the heat of combustion also heats up the excess air, which lowers the amount of heat available for the recovery). It is a common practice to provide twice the air needed for stoichiometric combustion. This method of CO control, which involves maintenance practices and proper operation of the equipment, is the most widely applied. Another method of CO control is the use of catalytic oxidation.

Down wash

Down wash refers to conditions where wind "washes" the plume down to the ground due to eddies that form down wind of buildings or other obstructions. Down wash can occur when a stack height is less than a height derived by a procedure called "Good Engineering Practice" (GEP), as defined in 18 AAC 50.900(23). The GEP stack heights are determined by using the procedure described in EPA's Guideline for Determination of Good Engineering Practice Stack Height (Technical Support Document for the Stack Height Regulations) (revised) EPA-450/4-80-023R (June, 1985). No down wash effects are expected for a stack that meets GEP height criteria.

The modeling of down wash impacts requires the inclusion of dimensions from nearby buildings. EPA has established specific algorithms for determining which buildings must be included and for determining the profile dimensions that would be "seen" by a given stack. They have also incorporated these algorithms in a separate computer program called the "Building Profile Input Program" (BPIP) (see Appendix F in the YPC application). The applicant used BPIP to determine the needed building profiles for use with their analytical models.

Increment Analysis

Both the construction and operation stages of the YPC project require a demonstration of increment compliance, except for construction PM_{10} emissions. The refined receptor grids analysis results are summarized in Table 6.2 of YPC's PSD Application. (YPC 1996). As previously indicated, this analysis is believed to be conservative since the input emission bases represent the period with the expected highest short- and long-term emissions during the entire project. As stated in Section 5.1, each Air Quality Control Region has its own baseline date. YPC is located in the Southcentral Alaska Intrastate Region, and the applicable baseline date for particulate matter and sulfur dioxide is October 26, 1979. The baseline date for nitrogen dioxide is February 8, 1988, statewide.

with concentrations that are below these values are considered to be negligible contributors to the violation. Therefore, the significant impact levels from 40 CFR 51.165(b)(2) are also shown in Table 5.4.3-1 for each pollutant, along with the maximum concentration from YPC that occurs during the same time and place.

As shown in Table 5.4.3-1, the area-wide modeling results show no predicted violations of the CO, NO_2, PM_{10}, or SO_2 ambient standards. All other modeled pollutants and averaging times are well within the ambient standards. The potential 24-hour PM_{10} significant impact occurs at a location on YPC's property boundary. The applicant's maximum contribution during this period is predicted to be about 12% of the standard.

Table 5.4.3-2 shows the State's Class II increment standards and the maximum increment concentrations modeled by YPC. The table shows that the annual average PM-10, SO_2, and NO_2 concentrations are within the Class II increment standards. However, when considering all area-wide sources, there appears to be a significant consumption of the annual NO_2 Class II increment. The Department believes the final design configuration will more accurately determine the expected increment impact. Therefore, the Department has imposed a permit condition that YPC notify the Department of YPC changes to the facility configuration and activities that are different from those assumed and modeled in the August 1996 application. Upon review, the Department will make a written determination (within 60-days of receipt), if such changes warrant a supplemental ambient air impact modeling assessment.

As was done for the ambient standard analysis, the applicant evaluated the impacts from their facility and other increment consuming sources identified in the Anderson Bay area to address potential increment violation problems. At each receptor with a modeled increment of a significant level, the applicant compared the contribution from their facility and the other increment sources to the appropriate significant impact level. As shown in Table 5.4-3-2, the maximum concentrations for the regulated pollutants are greater than the prescribed significant impact levels. However, the maximum predicted PSD increment consumption by either the proposed YPC facility or other increment consuming sources do not cause or contribute to a violation of the Class II increments.

drained, gravelly to stony glacial till, with dark subsoil associated with peat. This type of soil is typically very productive and nitrogen-rich. The soils are seldom frozen, but not suitable for agriculture because of steep slopes, rocky characteristics, and soil temperature is kept too cool for desirable vegetation development by glacial and ice melt run-off. However, the soils do support lush vegetation and commercial stands of timber.

In the vicinity of the terminal, the soils are moderately well drained gravelly soil. The soils are moderately acidic, and support stands of Sitka spruce, western hemlock, and black cottonwood, with alder and willow brush and various grasses in non-forested terrain.

Many factors can influence the toxic response of a plant to a given air contaminant, but they can be categorized into four major elements: biological characteristics of plants, the environment in which the plants are growing, pollutant concentration, and duration of exposure. Biological characteristics include genetic makeup and the stage of plant. Although sensitivity to air pollution is well known for many cultivated plants, native and forest species may exhibit a wide range of responses, even among a given species. Environmental factors include climate, light quality and quantity, temperature, relative humidity, and soil nutrition. Ambient air pollutant concentration is the primary indicator of potential impact since damage or injury to plants occur mostly through foliage injury, and not by absorption through plant roots. The concentration of a pollutant and length of the exposure period are collectively known as the dose. The lowest dose that produces an effect is called the threshold dose.

Effects of nitrogen and sulfur compounds are summarized in the section below. No adverse effects to soils or vegetation near the facility site are expected to occur as a result of the facility's smaller emissions of other pollutants, such as particulate matter, carbon monoxide, and volatile organic matter.

Nitrogen Compounds Effects

Ambient air impacts due to the emissions of NO_x from the modified facility, in conjunction with nearby sources of air contaminants, are estimated to be 26.3 $\mu g/m^3$ during operations near at the zone of maximum impact. During construction, combined impacts are estimated to be 26.3 $\mu g/m^3$ Studies of peer reviewed material indicate that for exposures in the range of 940 to 1,880 $\mu g/m^3$ of NO_x, growth retardation in sensitive plants may occur, and that exposures of 3,760 $\mu g/m^3$ have demonstrated acute vegetative injury. The NO_x depositions are not expected to significantly change the nutritional value of the soil to support vegetation.

The effect of NO_2 on several eastern forest tree species has been documented by Kress. Two of the seven species he exposed, Virginia pine (Pinus virginiana) and Loblolly pine (Pinus taeda), exhibited significant height growth effects in response to NO_2 administered at 191 $\mu g/m^3$. Although neither of these species occurs at Valdez, the commonly accepted threshold value for

chronic (10,000- hour) laboratory exposure of crops and trees is 191 $\mu g/m^3$. This is roughly twice the health-based standard.

The U.S. Fish and Wildlife Service has noted that the *Nikiski Vegetation Impact Study*, (Sullivan et. al, 1990), found that chronic atmospheric input of nitrogen compounds have resulted in the loss of boreal lichens, the decline of under story species, and general forest decline in the vicinity of the Nikiski Industrial complex north of Kenai. The report noted that the ambient air concentrations of nitrogen compounds which might have contributed to the damage. These concentrations included large quantities of ammonia emitted as a result of accidental or emergency releases from the Unocal Mitsubishi fertilizer plants, in addition to nitrogenous compounds emitted by other sources such as fuel burning equipment.

Sulfur Compounds

The natural gas primary fuel has been processed to contain no greater than 4-ppm hydrogen sulfide. Distillate fuel will be primarily used as a back-up or secondary fuel for start-up and interruption in the natural gas supply. Therefore, the sulfur dioxide emissions will be much lower than represented in the dispersion modeling described in Section 5. Using this conservative modeling with distillate fuel for the package boiler, turbines, and auxiliary burner and the firewater pumps, the predicted maximum total post-facility concentrations were 276.7 $\mu g/m^3$, 87.5 $\mu g/m^3$, 18.2 $\mu g/m^3$, 3-hr, 24 -hr, and annual concentrations, respectively.

Annual sulfur dioxide ambient air impacts due to the potential emissions from the applicant's facility with existing background levels is estimated to be 18.2 $\mu g/m^3$. Studies have shown that chronic vegetative injury for vascular plants may be experienced with an annual average impact of 131 $\mu g/m^3$ of SO_2. A sensitive type of vegetation found in Alaska is lichen. Lichens are known bio-accumulators, and are sensitive to SO_2 and trace metals. Mean annual SO_2 concentrations of 60 $\mu g/m^3$ may reduce the species diversity of lichen communities, and average annual concentrations as low as 30 $\mu g/m^3$ may injure some of the more sensitive lichen species.

One extremely sensitive component of the vegetation found around Valdez Arm is fruticose lichen. Lichens are divided into three different morphological growth types: fruticose, crustose, and foliose. One of the fruticose lichens sensitive to SO_2 is Cladonia fimbriata. Most recent research suggests that Cladonia fimbriata would tolerate an annual average SO_2 concentration of 13 $\mu g/m^3$. An annual concentration between 13 and 26 $\mu g/m^3$ SO_2 would have an adverse impact on lichens. This facility operates on distillate fuel intermittently. The application modeling scenerio included operating all dual fuel-fired equipment on distillate fuel exclusively and operating the diesel-fired engines 50% of the time (rather than only an emergency and periodic testing), and two marine tankers at berth continuously. The expected annual concentrations as conservatively modeled are expected to be 18.2 $\mu g/m^3$ at areas of maximum impact, but the Department does not anticipate a decline of the fruticose lichens species due to the facility's anticipated potential to emit.

SAMPLE CALCULATIONS

GE Frame 5 Model 5382(c), rated 363.4 MMBtu/hr, turbine

NO_x emission factor (natural gas only) = 0.102 lb NO_x/MMBtu
Continuous Rated Capacity = 363.4 MMBtu/hr
Additional Rated Capacity = 42,600 hp
Assumed annual load = 8,760 hrs/yr

	Emission Factor	Heat Input	Annual Operating	Conversion Factor
Allowable Emissions =	(0.102 lb NOx/MMBtu *	363.4 MMBtu/hr*	8760hrs/yr*	(1 ton/2000 lb) =
	162.35 tons/year			

	Emission Factor	Heat Input	Conversion Factor	Conversion Factor
	(0.102 lb NOx/MMBtu *	363.4 MMBtu/hr*	1 hr/3600sec *	(453.6 g/lb)
	4.67 g/sec			

SO_2 emission factor (natural gas only) = 0.0008 lb/MMBtu
PM_{10} emission factor (natural gas only) = 0.0069 lb/MMBtu
CO emission factor (natural gas only) = 0.041 lb/MMBtu
VOC emission factor (natural gas only) = 0.002 lb/MMBtu

ALLOWABLE EMISSIONS (FACTORS DETERMINED FROM SOURCE TEST, VENDOR DATA, AND AP-42)

Source # / Description / Model #	1,2,3,4,8,9,10,11	5,12,18,26	6, 13, 20, 27	7, 14, 21, 28	40, 41, 42	36	34	34a, 35	38	38b		29,30	31, 32	31, 33	37	37	46	46, 47	48
	Process Trains A, B, C, D *				Dual fired Equipment														
	15,16,17,18,22	33,34,35	Drier	Dry Process	43, 44	Steam	Steam	Caterpillar	Caterpillar	Duct Burner		Marine or	LNG tanker	LNG tanker	Fluidized	Fluidized	Fresh	Sea	Air
	23,24,25		Reactivation	Flare	Caterpillar	Package	Package	Solar-Mars	Solar-Mars			Wet	Berth #1,2	Berth #1,2	bed	bed	Firewater	Firewater	Compressor[2]
	GE Frame 5M	EGT Typhoon	Heater		Solar-Mars	Boiler	Boiler	90 T 12000	90 T 12000			Flare			Incinerator	Incinerator	Pump[2]	Pump[2]	
	5382(c) turbine	turbine			90 T 12000														
Number units	18	7	4	4	5	1	1	1	1	1		2	2		1	1	1	2	1
Typical fuel[1]	NG	NG	NG	NG	NG	NG	Diesel	NG	diesel	NG	diesel	NG	NG	fuel oil	various[1]	various[1]	diesel	diesel	diesel
Continous Rated Capacity (CRC)	363.4	51.73	17.963	46.6	9,829	164	164	9,829	9,114	9,189	86.5	100	58	58	25	974	470	1,860	250
-CRC units	MMBtu/hr	MMBtu/hr	MMBtu/hr	MMBtu/hr	kw	MMBtu/hr	MMBtu/hr	kw	kw	kw	MMBtu/hr	lb/hr	MMBtu/hr	MMBtu/hr	lb/hr	lb/hr	hp	hp	hp
Additional information	42,600	6,900	n/a	2,476	10,935	n/a	n/a	10,935	11,028	10,918	n/a	1,860	49	60	999	999	n/a	25%	n/a
-units	hp	hp	n/a	lb/hr	BTU/kwh	n/a	n/a	BTU/kwh	BTU/kwh	BTU/kwh	n/a	MMBtu/hr	MMBtu/hr	gal/hr	lb/hr	lb/hr	n/a	fuel sulfur	n/a
								107,460,115	100,509,192										
Assumed Annual Load	100%	100%	100%	100%	100%	14.1%	14.1%	100%	100%	100%	100%	100%	100%	100%	100%	100%	100%	100%	100%
Equivalent hrs/yr/unit	8,760	8760	8760	8760	8760	8760	8760	8760	8760	8760	8760	8760	8760	8760	8760	8760	8760	8760	4380.00
heat value of fuel	0	0	1,050	8,722,025	0	1,000	137,000		137,000	137,000		18,800					137,000	137,000	137,000
-units of heat value			BTU/CF	liter/hr		BTU/CF	BTU/gal		BTU/gal	BTU/gal	BTU/gal	BTU/lb LHV					BTU/gal	BTU/gal	BTU/gal
NO_x ER annual emission factor	0.102	0.100	140.00	0.068	0.10	81	20	0.10	3,193.18	0.52	0.10	20	0.068	0.44	36.40	1.70	5.02	0.031	0.024	0.031
-emission factor units	lb/MMBtu	lb/MMBtu	lb/mmcf	lb/MMBtu	lb/MMBtu	lb/10^6 cf	lb/10^3 gal	lb/MMBtu		lb/MMBtu	lb/MMBtu	lb/10^3 gal	lb/MMBtu	lb/MMBtu	lb/10^3 gal	lbs/ton feed	lbs/ton feed	lb/hp-hr	lb/hp-hr	lb/hp-hr
Emission factor given by	Manufacturer	Manufacturer	AP-42	AP-42	Manufacturer	AP-42	AP-42	Manufacturer		Manufacturer	Manufacturer	AP-42	AP-42	AP-42	AP-42	AP-42	AP-42	AP-42	AP-42
NO_x TPY[1]	162.36	22.66	10.49	14.44	47.08	8.2039	14.7889	47.08		226.00	36.76	56.5883	0.56	94.43	9.67	0.09	10.71	63.82	174.50	16.97
NO_x check g/sec[2]	4.670	0.662	0.302	0.416	1.364	1.674	0.425	1.364		6.501	1.116	1.628	0.016	2.717	0.278	0.003	0.308	1.836	5.020	0.488
gram/sec																				
SO_2 Emission factor	0.00080	0.00075	0.6	0.00001	0.0008	0.6	35.5	0.0008		0.2800	0.0007	35.5	0.00001	2.992	556.50	18.00	3.90	0.00205	0.00220	0.00205
-emission factor units	lb/MMBtu	lb/MMBtu	lb/mmcf	lb/MMBtu	lb/MMBtu	lb/10^6 cf	lb/10^3 gal	lb/MMBtu		lb/MMBtu	lb/MMBtu	lb/10^3 gal	lb/MMBtu	0.31	lb/10^3 gal	lbs/ton feed	lbs/ton feed	lb/hp-hr	lb/hp-hr	lb/hp-hr
	Manufacturer	Manufacturer	AP-42	AP-42	Manufacturer	AP-42	AP-42	Manufacturer		Manufacturer	Manufacturer	AP-42	AP-42	AP-42	AP-42	AP-42	AP-42	AP-42	AP-42	AP-42
SO_2 TPY[1]	1.3	0.2	0.046	0.0	0.38	0.0606	26.2449	0.38		123.04	0.271	100.4443	0.0	0.00	146.26	0.99	8.32	4.22	16.00	1.12
SO_2 check g/sec[2]	0.037	0.005	0.0013	0.000	0.011	0.012	0.756	0.011		3.839	0.008	2.889	0.000	0.000	4.21	0.028	0.239	0.121	0.460	0.0323
gram/sec														4.21		0.27				
PM_{10} annual ER	0.0069	0.0116	13.7	40	0.0195	2.0	2.0	0.0195		0.0379	0.0050	2.0	40.0000	0.0419	10.00	0.44	0.94	0.00220	0.05730	0.00220
-emission factor units	lb/MMBtu	lb/MMBtu	lb/mmcf	ug/l	lb/MMBtu	lb/10^6 cf	lb/10^3 gal	lb/MMBtu		lb/MMBtu	lb/MMBtu	lb/10^3 gal	ug/m^3	lb/MMBtu	lb/10^3 gal	lbs/ton feed	lbs/ton feed	lb/hp-hr	lb/MMBtu	lb/hp-hr
	Manufacturer	Manufacturer	AP-42	AP-42	Manufacturer	AP-42	AP-42	Manufacturer		Manufacturer	Manufacturer	AP-42	AP-42	AP-42	AP-42	AP-42	AP-42	AP-42	AP-42	AP-42
PM_{10} TPY[1]	10.99	2.83	1.0	33.7	9.16	0.2026	1.4766	9.16		16.66	1.938	8.6588	0.00	8.99	2.63	0.02	2.00	4.63	1.11	1.20
PM_{10} check g/sec[2]	0.316	0.076	0.030	0.097	0.264	0.041	0.043	0.264		0.479	0.056	0.163	0.00	0.259	0.076	0.001	0.057	0.130	0.032	0.035
gram/sec														0.33		0.06				
CO max ER	0.041	0.061	35.000	0.370	0.1220	40.000	5.000	0.1220		0.1256	0.0800	5.000	0.370	0.11	0.00	2.100	1.920	0.00668	0.00529	0.00668
-emission factor units	lb/MMBtu	lb/MMBtu	lb/mmcf	lb/MMBtu	lb/MMBtu	lb/10^6 cf	lb/10^3 gal	lb/MMBtu		lb/MMBtu	lb/MMBtu	lb/10^3 gal	lb/MMBtu	lb/MMBtu	lb/10^3 gal	lbs/ton feed	lbs/ton feed	lb/hp-hr	lb/hp-hr	lb/hp-hr
	Manufacturer	Manufacturer	AP-42	AP-42	Manufacturer	AP-42	AP-42	Manufacturer		Manufacturer	Manufacturer	AP-42	AP-42	AP-42	AP-42	AP-42	AP-42	AP-42	AP-42	AP-42
CO TPY[1]	66.26	13.82	2.62	78.76	67.43	4.08	3.70	67.43		65.18	31.010	14.18	3.08	23.61	0.00000	0.11	4.10	13.75	38.46	3.66
CO check g/sec[2]	1.877	0.398	0.075	2.27	1.852	0.027	0.106	1.852		1.867	0.892	0.407	0.089	0.679	0.000	0.003	0.118	0.396	1.106	0.106
gram/sec														0.68		0.12				
VOC ER	0.002	0.019	2.764	0.063	0.00350	1.411	0.200	0.00350		0.03607	0.0020	0.200	0.063	0.024	3.20		3.200	0.00247	0.00073	0.00247
-emission factor units	lb/MMBtu	lb/MMBtu	lb/mmcf	lb/MMBtu	lb/MMBtu	lb/10^6 cf	lb/10^3 gal	lb/MMBtu		lb/MMBtu	lb/MMBtu	lb/10^3 gal	lb/MMBtu	lb/MMBtu	lb/10^3 gal		lbs/ton feed	lb/hp-hr	lb/hp-hr	lb/hp-hr
	Manufacturer	Manufacturer	AP-42	AP-42	Manufacturer	AP-42	AP-42	Manufacturer		Manufacturer	Manufacturer	AP-42	AP-42	AP-42	AP-42		AP-42	AP-42	AP-42	AP-42
VOC TPY[1]	3.18	4.30	0.21	13.41	1.65	0.14	0.18	1.65		18.88	0.776	0.57	0.82	6.16	0.84096		7.00	6.08	8.29	1.38
VOC check g/sec[2]	0.092	0.124	0.006	0.386	0.0474	0.029	0.0043	0.0474		0.4860	0.022	0.0163	0.016	0.148	0.024		0.201	0.146	0.152	0.039

Notes:

[1] Fuel burned in source, NG-natural gas, diesel, various fuel contains 25 lb/hr biological sludge including spent solvents and oils and 974 lb/hr on non sludge solids. The non sludge solids are general construction, garbage, shipping materiae

[2] The modeled operating scenario is the operation that yields the highest emissions, the fresh firewater pump running continuously and one sea firewater pumps and the compressor in not operating.

[3] Calculated number see sample calculations section in TAR

RESPONSE TO JULY 28, 1997 COMMENTS
YPC ANDERSON BAY PROJECT
AIR QUALITY CONSTRUCTION PERMIT

Construction Permit

1. Page 1 preamble has a typographical error, with a clause referring to the wrong Exhibit. *The Department concurs and has corrected the reference.*

2. Page 3, standard permit condition regarding certification of documents--YPC believes the application of 50.205 certification to "other documents" is too broad. They recommend we replace "other documents" with "applications." *The requested change conflicts with the standard permit condition listed in 18 AAC 50.345. The Department is retaining the draft language.*

3. Page 5, Condition II.H, refers to an incorrect Exhibit. *The Department concurs and has corrected the reference.*

4. Page 6, Condition III Title--Strike "Notification" from the Condition title. *The Department concurs. The notification originally listed under this Condition was moved to Condition IV.*

5. Page 6, Condition IV(D)--Replace "air contaminant" with "PM-10." The proposed monitoring station applies only to one ambient air contaminant. *The Department concurs with the recommended revision and has changed the terminology.*

6. Page 7, Condition V--Reference to Condition I(G) is incorrect. It should be II(G). *The Department concurs and has corrected the reference.*

7. Page 18, Condition IX, A.1--Typographical error. Please replace "form" with "from." *The Department concurs and has corrected the error.*

8. Page 19, Condition X(a)(1)--YPC proposed that Source Nos. 6, 13, 20, and 27 meet 0.14 lb/MMBTU NOx, while burning natural gas, not 0.10. Also, Sources 36 and 38b are dual-fuel capable for emergency. Please add the phrase "while firing natural gas." *The Department concurs that the sources as proposed may not be able to meet the limit listed in the draft final permit. The Department has added a subsection listing the 0.14 lb/MMBtu limit for the affected sources and the clause for the dual-fuel units.*

9. Page 20, Condition X(A)(3)(c)--Please remove boiler Unit 36 from the emission limits established for combustion turbines. Add a provision for boiler unit 36 to meet the 40 lb/mmscf of natural gas and 5 lb/1000 gallons of distillate fuel oil. *The Department concurs that the boiler should not need to comply with combustion turbine limits. The Department has added the provision for the boiler to comply with the boiler's expected carbon monoxide emissions.*

10. Page 20, Conditions X(A)(4(e) and (f)--Please add the term "each" after the ton per year limits. *The Department agrees with the recommended change for clarification and has amended the permit.*

11. Page 21, Condition X(A)(5)(a)--Revise the first line for natural gas-fired sources to exclude 36, 38, and 39. These are dual-fuel fired. Revise the second line to refer to both fuels permitted for the dual-fuel fired sources. *The Department has revised the terminology to clarify that the sources 36, 38, and 39 are dual-fuel fired.*

12. Page 21, Condition X(C)(1)(a)--Replace "15 minute" with "90-minute" to comport more with source test duration as an averaging period to ensure compliance with the NOx limit. *The Department concurs that this recommendation would result in a more equitable averaging period to ensure compliance with the Best Available Control Technology limit.*

Technical Analysis Report

1. Page 36, revise emission limits tabulated to comport with permit comment number 8. *The Department has revised the limits.*

2. Page 59, Table 4-3--On the first line, delete 33-35. *The Department concurs that the sources are listed twice in the Table. The Department has removed the redundant listing.*

3. Page 90, delete "prepared by Radian, Inc." as YPC prepared the application. *The Department concurs to remove the clause.*

4. Page 96, change the table citation from 5.4.3 to 5.4.3-2, as the final TAR has table number revisions. *The Department has changed the citation.*

5. Page 102, change the NO_2 impacts from 18.1 to 26.3 ug/m^3. *The Department concurs that the text on this page is incorrect and has changed the projected impacts.*

6. Page 103, typographical error in table--should read "10,000", not "10,00." Page 114, typographical error. The Frame 5 turbines are rated at 42,600 HP, not 42,000 HP. *The Department has corrected the two typographical errors.*

7. The Excel spreadsheet in Appendix A has several errors and misplaced units. Please correct the tables. *The Department has revised the spreadsheet to correct the errors.*

ALASKA DEPARTMENT OF ENVIRONMENTAL CONSERVATION

FINAL TECHNICAL ANALYSIS REPORT

Date:	July 28, 1997
APPLICANT:	Yukon Pacific Company Limited Partnership
FACILITY ADDRESS:	Proposed facility, no address available
CORPORATE ADDRESS:	1049 West 5th Avenue Anchorage, AK 99501
TELEPHONE:	(907) 265-3100 (Corporate Headquarters)
FAX:	(907) 265-3180 (Corporate Headquarters) (907) 265-3190 (Corporate Headquarters)
RESPONSIBLE OFFICERS:	Michael C. T. Smith Manager of Permitting Corporate Headquarters
PROJECT NAME:	Anderson Bay Liquefied Natural Gas Plant and Marine Terminal Prevention of Significant Deterioration Application
FACILITY OPERATOR:	Yukon Pacific Corporation
FACILITY LOCATION:	UTM Coordinates, Northing 6772 km, Easting 526 km
NATURE OF BUSINESS:	Production and Distribution of Liquefied Natural Gas
DESCRIPTION:	Yukon Pacific Company, L.P., has submitted a Prevention of Significant Deterioration (PSD) application on October 2, 1996 for the proposed facility.

TABLE OF CONTENTS

1.0 EXECUTIVE SUMMARY 1

2.0 INTRODUCTION 4
2.1 PROJECT DESCRIPTION 6
2.2 EMISSION SOURCES 12

3.0 NEW SOURCE REVIEW 24
3.1 NEW SOURCE PERFORMANCE STANDARDS 24
3.2 ALASKA EMISSION STANDARDS 29

4.0 BEST AVAILABLE CONTROL TECHNOLOGY 31
4.1 CONTROL OF OXIDES OF NITROGEN (NO_X) 33
4.1.1 Mechanisms of NO_X Formation 33
4.1.2 Available and Technically Feasible Control Technology for NO_X 35
4.1.3 Impacts of Available and Technically Feasible Control Technologies for NO_X 50
4.1.4 Final BACT Determinations 53
4.2 CONTROL TECHNOLOGY FOR SULFUR DIOXIDE (SO_2) 53
4.3 CONTROL TECHNOLOGY FOR CARBON MONOXIDE (CO) 58
4.3.1 Mechanisms of CO Formation 59
4.3.2 Available Control Technology for Carbon Monoxide 60
4.3.3 Impacts of Technically Feasible Control Technologies for CO 65
4.3.4 Final BACT Determination for CO 66
4.4 CONTROL TECHNOLOGY FOR PARTICULATE MATTER (PM_{10}) 66
4.4.1 Mechanisms of PM_{10} Formation 66
4.4.2 Available Control Technology for PM_{10} 66
4.4.3 Final BACT Determination for Particulate Matter 69
4.5 CONTROL TECHNOLOGY FOR VOLATILE ORGANIC COMPOUNDS . . 69
4.5.1 Mechanisms of Volatile Organic Compound (VOC) Formation 70
4.5.2 Available Control Technology for Volatile Organic Compounds 70
4.5.3 Final BACT Determination for VOC 71

5.0 AMBIENT AIR QUALITY IMPACT ANALYSIS 72
5.1 INTRODUCTION 72
5.1.1 National Ambient Air Quality Standards 72
5.1.2 PSD Increments 72
5.1.3 Pre-construction Review 73
5.1.4 Ambient Analysis Tools 74
5.2 METEOROLOGICAL DATA 75

5.3 AMBIENT AIR CONTAMINANT MONITORING 81
5.4 COMPUTER MODELING 84
5.4.1 Model Selection 84
5.4.2 Analysis 86
5.4.3 Results 95
5.5 CONCLUSIONS 99

6.0 AIR QUALITY RELATED VALUES AND ADDITIONAL IMPACTS 99
6.1 PRIMARY IMPACTS 100
6.1.1 Visibility 100
6.1.2 Aesthetic Values 101
6.1.3 Soils and Vegetation 101
6.1.3 Waters 104
6.1.4 Hazardous Air Pollutants 105
6.1.5 Noise 105
6.1.6 Odor 105
6.2 SECONDARY IMPACTS 105
6.2.1 Construction Impacts 106
6.3 MITIGATION PROCEDURES 107
6.3.1 Ice Fog 107

8.0 REFERENCES 110

APPENDIX A

APPENDIX B

APPENDIX C

APPENDIX D

APPENDIX E

LIST OF FIGURES

Figure	Page
2.1 Facility Location	8
3.2 Facility Layout	9
A-2 Facility Layout	10
5.2-1 Wind rose for YPC 12-meter Meteorological Data	79
5.2-2 Wind rose for YPC 39-meter Meteorological Data	80
5.4-1 Receptor Grid Construction Phase	93
5.4-2 Receptor Grid Operational Phase	94

LIST OF TABLES

Table	Page
2-1 Construction Schedule	11
2-2 Facility Operational Equipment	13
2-2-A Operational Point Source Inventory: Process Train A	14
2-2-B Operational Point Source Inventory: Process Train B	15
2-2-C Operational Point Source Inventory: Process Train C	16
2-2-D Operational Point Source Inventory: Process Train D	17
2-2-E Operational Point Source Inventory: Other Emission Sources	18
2-2-F Point Source Inventory: Diesel Only Emission Sources	19
2-3-A Construction Point Source Inventory	20
2-3-B Construction Volume Source Inventory	21
2-3-C Construction Activity Inventory	22
2-4 Estimated Total Facility Operational Emission and PSD Applicability	23
4-1 BACT for NOx	35
5.4-2 Fine Receptor Grid Results	91
5.4.3-1 Air Quality Standard Analysis Worst-Case Facility Operation	97
5.4.3-2 PSD Increment Analysis, Facility Operation	98

ABBREVIATIONS AND ACRONYMS

BACT	Best Available Control Technology
CEM	Continuous Emission Monitor
CFR	U.S. Code of Federal Register
CO	Carbon Monoxide
DEC	Alaska Department of Environmental Conservation
EGR	Exhaust Gas Recirculation
EPA	U. S. Environmental Protection Agency
ESP	Electrostatic Precipitator
FITR	Fuel Injection Timing Retard
LAER	Lowest Available Emission Rate
MMBtu	million British thermal units
NAAQS	National Ambient Air Quality Standards
NESHAP	National Emission Standards for Hazardous Air Pollutants
NSCR	Non-Selective Catalytic Reduction
NSPS	New Source Performance Review
NO	Nitrogen Oxide
NO_X	oxides of nitrogen
NO_2	Nitrogen Dioxide
OLM	Ozone Limiting Method
OSHA	Occupational Safety and Health Administration
PM	Particulate matter
PM-10	Particulate matter (10 micrometers or less in size)
PSD	Prevention of Significant Deterioration
RACT	Reasonably Available Control Technology
SCO	Selective Catalytic Oxidation
SCR	Selective Catalytic Reduction
SNCR	Selective Non-Catalytic Reduction
SO_2	Sulfur Dioxide
TSP	total suspended particulate (30 micrometers or less)
VOC	volatile organic compounds
$\mu g/m^3$	microgram per cubic meter
hr	hour

1.0 EXECUTIVE SUMMARY

On October 2, 1996, the State of Alaska, Department of the Environmental Conservation (Department), received a complete application for pre-construction review under the Prevention of Significant Deterioration (PSD) and the Air Quality Control Program. The Department has completed its review of the Yukon Pacific Company Limited Partnership (applicant) application for an Air Quality Control Permit to Operate with PSD for the proposed Anderson Bay Liquefied Natural Gas and Marine Terminal (facility). Based upon our review, the Department finds that for proposed facility located approximately three miles east of the Valdez Narrows on the south shore of Port Valdez:

1. Is a facility for the production, temporary storage, and loading of liquefied natural gas, and contains industrial processes, fuel burning equipment, and an incinerator; electricity and steam requirements for the facility will be met by self-contained on-site equipment.

2. The Anderson Bay Plant consists of a single facility as described in 18 AAC 50.990(36) referencing AS 46.14.990.

3. the inventory of 48 fuel-burning equipment includes twenty-eight natural gas-fired turbines, two dual-fuel fired turbines, six flares, four natural gas-fired heaters, one dual-fuel-fired steam package boiler, two tanker berths, one fluidized bed incinerator, three diesel-fired emergency fire-water pumps, and one emergency diesel-fired air compressor.

4. the fuel burning equipment are subject to the State Air Quality Control Regulations 18 AAC 50.055(a)(1) for visible emissions, 18 AAC 50.055 (b)(1) for particulate matter emissions, 18 AAC 50.0550(c) for sulfur oxides emissions. The incinerator (source 37), is subject to 18 AAC 50.050(a)(2) for visible emissions and 18 AAC 50.050(b) Table 4 for particulate matter; the marine vessels while berthed are subject to 18 AAC 50.070.

5. Is a facility with allowable emissions of more than 250 tons per year of several regulated air contaminants, and is a facility as described in 18 AAC 50.300(c)(1) which is under review for PSD. The estimated allowable emissions from this facility are 4070 tons per year of oxides of nitrogen (NO_X), 711 tons per year of sulfur dioxide (SO_2), 452 tons per year of particulate emissions, 1999 tons per year of carbon monoxide (CO) emissions, and 411 tons per year of volatile organic compounds (VOC).

6. The applicant has shown emissions of oxides of nitrogen (NO_X), sulfur dioxide (SO_2), particulate emissions, carbon monoxide (CO), and volatile organic compounds (VOC), will not interfere with the attainment or maintenance of ambient air quality standards listed in 18 AAC 50.010 and increments listed in 18 AAC 50.020 Table 3. The Department requires BACT analysis for all sources except the construction sources which are considered associated impacts in the Air Quality Control Plan, Volume II.

7. The thirty natural gas-fired turbines are subject to Federal New Source Performance Standards (NSPS) 40 CFR, Part 60, Subpart GG, incorporated by reference in 18 AAC 50.040(a)(2)(V). The duct burner is subject to NSPS Subpart Dc incorporated by reference in 18 AAC 50.040(a)(2)(E). The dual-fired boiler is subject to NSPS Subpart Db incorporated by reference in 18 AAC 50.040(a)(2)(D). The facility must comply with Subpart KKK-Equipment leaks of VOC from Onshore Natural Gas Processing Plants incorporated by reference in 18 AAC 50.040(a)(2)(DD) for control of fugitive VOC emissions. NSPS standards do not apply to other equipment at the facility. The incinerator is subject to mercury standard, National Emission Standards of Hazardous Air Pollutants (NESHAPS), Subpart E incorporated by reference in 18 AAC 50.040(b)(2)(A).

8. The Department considered stationary construction sources as an associated growth analysis as defined in State Air Quality Control Plan Volume II revised October 30, 1983, page IV.F.3-4, therefore BACT is not required on construction sources. Non-stationary sources are exempted from BACT analysis because they do not meet the definition listed in 40 CFR 51.165(a)(1)(i) and (ii). The LNG marine tanker boilers are not stationary sources and therefore are not subject to BACT because it is not a building, structure, facility, or installation defined in 40 CFR 51.165(a)(1)(ii).

9. Necessary NO_X BACT for the facility's turbines, duct burners, boiler, and heaters are dry Low NO_X controls and low NO_x burners. For the incinerator, flares, and diesel-fired engines, the Department has determined no controls are technically and economically feasible, but the applicant shall operate the equipment using good operating practices per the equipment design.

10. Necessary SO_2 BACT for the facility's equipment is natural gas as primary fuel and low sulfur (0.25% by weight) distillate fuel oil as back-up fuel for the two dual-fuel-fired turbines, duct burners, and boilers. Please note that distillate fuel and diesel fuel is used interchangeably within this document. Natural gas heaters use natural gas only with a hydrogen sulfide content of less than 4 ppm, the diesel-fired engines will use low sulfur diesel, the marine tankers will use natural gas and 3.5% sulfur

content marine fuel oil limited at 15% of full load. No controls are considered BACT for the incinerator and flares.

11. Necessary PM_{10} BACT for the facility's fuel burning equipment is combustion control. The incinerator will be installed with a venturi scrubber. All equipment BACT for CO and VOC is combustion control or operated per manufacturer's design. VOC BACT for fugitive emissions is the flaring system and leak detection and repair.

12. The ambient impact assessment prepared by the applicant shows the facility and associated growth will not cause or contribute to a violation of the Ambient Air Quality Standards (AAQS) and PSD increment.

13. No impairment of visibility is expected within Class I areas and integral vistas identified in 18 AAC 50.025(a) and 50.015(c), or within the Class II areas due to the facility construction.

14. YPC LNG/MT is a phased project allowing tiered coastal consistency review. DEC may issue the facility's PSD Air Permit per January 20, 1988 letter from DGC to YPC. Letter is contained in Appendix D.

15. No person may dilute emissions with ambient air. The owner and or operator shall ensure the facility complies with any other applicable local, State, or federal law. The owner or operator subject to this permit, by following the stipulations of the permit, will not cause or contribute to violations in the ambient air standards or increments. Dispersion techniques are not allowed as described in 18 AAC 50.045(e)-(g).

As a result of the PSD review, the Department has determined that the proposed construction and defined operation of the applicant's facility and associated growth would not cause or contribute to a violation of the ambient air standards and PSD increments in Class I and Class II areas. Proposed controls represent BACT. The Department further determined that the primary and secondary impacts of facility emissions and associated growth will not adversely affect air quality related values of soils, visibility, vegetation, noise, or odor.

The Department finds the project's Air Quality Control Permit be consistent with the Alaska Coastal Management Program subject to permit terms and conditions.

2.0 INTRODUCTION

On October 2, 1996, the applicant submitted a complete application to the Department for an Air Quality Control Permit to Operate under PSD, prepared in accordance with State of Alaska Provisions 18 AAC 50.300.

On January 18, 1997, the Department reissued 18 AAC 50. This action separated the Air Quality permitting into two programs: Construction Permit and Operating Permit. On March 27, 1997, the Department received supplemental information to complete the application as a construction permit under the revised January 18, 1997 Air Quality Regulations.

This facility is classified as a PSD major facility as defined by 18 AAC 50.300(c)(1) emits greater than 250 tons per year of oxides of nitrogen (NO_X), sulfur dioxide (SO_2), Carbon Monoxide (CO), Total suspended particulates (TSP), particulate matter less than 10 microns in diameter (PM_{10}), and volatile organic compounds (VOC) emissions, and is subject to review under the PSD provisions of the Clean Air Act, and the State of Alaska Air Quality Control Regulations, 18 AAC 50. The Department required the applicant to conduct a Best Available Control Technology (BACT) analysis as required by 18 AAC 50.315(e)(3)(A) because the equipment expected NO_X, SO_2, CO, TSP, PM_{10}, and VOC emissions would exceed the PSD thresholds specified in 18 AAC 50.300(h)(3)(B)(i)-(vi). The facility is not classified as a Hazardous Air Contaminant major facility as defined in 18 AAC 50.300(f) because its emissions of all hazardous air contaminants (HAC) are less than 25 tons per year and less than 10 tons per year of any single HAC.

The facility will be constructed over a period of approximately nine years in which three years overlap between construction and operational activities. The applicant must demonstrate compliance with the Federal Clean Air Act and the State Air Quality Control Regulations during the entire period.

The Department reviews each proposed new or modified PSD major facility to establish the degree of emission control required. State rules requires a permittee to employ the BACT for construction or a major modification of major sources of air pollution, considering efficiency and availability of alternative control technologies, and associated environmental, technical, and economic impacts. The applicant and Department analyze ambient air quality impacts to verify that the proposed emissions from the project will comply with applicable increments and National Ambient Air Quality Standards (NAAQS).

Areas in attainment with NAAQS are categorized as Class I, Class II, and Class III areas for the purpose of air quality maintenance, depending on the level of industrial growth expected and the need to protect the area's air quality. The Environmental Protection Agency has established ambient air quality increments for each class, with Class I areas being most restrictive.

The facility's proposed location is Anderson Bay, approximately three miles east of the Valdez Narrows on the south shore of Port Valdez. The Port Valdez area is designated a Class II area for NAAQS. The proposed facility's surrounding area is in attainment or unclassified for all criteria air pollutants. The nearest Class I area for Ambient Air Quality is Denali National Park, located approximately 156 miles (260 kilometers) from the facility. The nearest area designated as non-attainment for a National Ambient Air Quality Standard--carbon monoxide--is Anchorage urban area approximately 100 miles west of Valdez. The nearest area designated as non-attainment for a National Ambient Air Quality Standard--inhalable particulate matter (PM_{10})--is Eagle River Community approximately 10 miles north of Anchorage, 100 miles west of Valdez.

The applicant installed and operated a meteorological system at the proposed site from January 1995 to April 1996 to obtain representative data on the meteorological variables needed to support dispersion modeling for evaluation of the facility's effect on ambient air quality.

The Department evaluated the NO_2 emissions impact from the applicant's facility and other nearby facilities to determine area-wide compliance with the ambient air standards and increments. The maximum cumulative impact of NO_2 emissions is estimated to be 26.3 micrograms per cubic meter ($\mu g/m^3$) annual average, which is less the ambient air quality standard of 100 $\mu g/m^3$. The maximum potential impact upon NO_2 Class II increments from the new equipment and operational modifications will be 18.2 $\mu g/m^3$. This consumes approximately seventy-three percent (73%) of the entire Class II air quality increment of 25 $\mu g/m^3$ for the annual average period. Impacts to the nearest Class I area are insignificant (less than 1 $\mu g/m^3$).

The Department evaluated the PM_{10} emission impact from the applicant's facility and other nearby facilities to determine area-wide compliance with the ambient air standards and increments. The maximum cumulative impact of PM_{10} emissions is estimated to be 13.8 micrograms per cubic meter ($\mu g/m^3$) annual average, which is less than the ambient air quality standard of 50 $\mu g/m^3$. The estimated 24-hour concentration is 107.6 ug/m^3 of PM_{10}, which is less than the applicable PM, 24-hr NAAQS of 150 ug/m^3. The maximum potential impact upon PM_{10} annual and 24-hour Class II increments from the new equipment and operational modifications will be 4.7 $\mu g/m^3$ and 20.6 $\mu g/m^3$, respectively. This consumes about twenty-eight percent (28%) of the entire Class II air quality increment of 17 $\mu g/m^3$ for the annual average period, and about sixty-nine percent (69%) of the 24-hour Class II air increment of 30 $\mu g/m^3$. Impacts in the nearest Class I area are insignificant (less than 1 $\mu g/m^3$).

The Department evaluated the SO_2 emission impact from the applicant's facility and other nearby facilities to determine area-wide compliance with the ambient air standards and increments. The maximum 3-hour, 24-hour, and annual average cumulative impact of SO_2 emissions from the applicant's facility and other local facilities is estimated to be 276.7 $\mu g/m^3$, 87.5 $\mu g/m^3$, and 18.2 $\mu g/m^3$, respectively. The corresponding 3-hour, 24-hour, and annual ambient air quality

standards are 1300 μg/m^3, 365 μg/m^3, and 80 μg/m^3. The Department notes that these are about twenty-five percent (25%) of the NAAQS.

The maximum potential impact upon 3-hour, 24-hour, and annual SO_2 Class II increments from the new equipment and construction will be 159.5 μg/m^3, 55.5 μg/m^3, and 11.0 μg/m^3, respectively. This is below the Class II air quality 3-hour, 24-hour, and annual increment of 512 μg/m^3, 91 μg/m^3, 20 μg/m^3, respectively. This consumes 31.2% of the 3-hour, 61% of the 24-hour, and 55% of the annual increments. Impacts in the nearest Class I area are insignificant (less than 1 μg/m^3).

The applicant and Department evaluated environmental impacts from construction and operation of the facility to identify any significant primary or secondary impacts caused by emissions from the proposed facility. The Department summarized these additional air quality impacts in Section 6, and identified mitigating procedures necessary to assure prevention of significant deterioration in the area surrounding the facility. The Department does not expect adverse secondary impacts or associated impacts. Impacts to the lands and waters are expected to be negligible. No impairment of visibility is expected within Class I areas identified in 18 AAC 50.015(c) and integral vistas identified in 18 AAC 50.025(a).

The PSD permit program is designed to manage air quality by evaluating the air contaminant emissions for new or modified major sources, and to assure that ambient air quality does not deteriorate beyond the PSD increments listed in 18 AAC 50.020(b)(2).

2.1 PROJECT DESCRIPTION

The facility is part of a larger industrial development proposed by Yukon Pacific Corporation, Trans-Alaska Gas System (TAGS). This larger project includes a natural gas conditioning plant located on the North Slope of Alaska, and an 800-mile pipeline with multiple compressor stations to transport conditioned gas from the North Slope to Port Valdez. The facility will receive conditioned gas via the pipeline, liquefy the gas by cryogenic refrigeration, and then load the produced LNG onto tankers for shipment to Pacific Rim Markets.

The facility consists of a natural gas liquefaction plant and marine terminal starting at the pipeline flange on the facility's eastern property boundary through the liquefied natural gas production and storage, the marine tankers, and associated tanker loading operations. The vapors produced from the facility's process, storage, and loading operations with be recovered in a closed system, compressed and used as fuel for internal processes. The conditioned gas contains methane, ethane, and small quantities of other compounds.

The facility contains 48 emission sources which include twenty-eight natural gas-fired turbines, two dual-fired turbines, six flares, four heaters, one steam package boiler, two tanker berths, one fluidized bed incinerator, three diesel pumps, and one air compressor.

The facility's average annual gas feed rate is approximately 2 billion cubic feet per day. The facility's annual capacity is approximately 15 million metric tons based on operation at the annual average ambient temperature in Valdez.

Figure 2.1 and Figure 3.2 show the facility location and layout, respectively. Figure A-2 illustrates the location of construction point sources.

The facility will occupy 290 acres of a 2,630-acre remote site owned by the State of Alaska. The remaining 2,340 acreas will be preserved as a buffer zone. During facility construction, a buffer zone of approximately 5,800 acres will be controlled by the applicant, of which 1,100 acres will be over water. Most of the area surrounding the facility is within the Chugach National Forest. The applicant received a Conditional Right-of-Way Lease of this property from to State of Alaska, Department of Natural Resources, Division of Land and Water Management State Pipeline Office.

The land surrounding the facility is moderately steep bedrock, covered with layers of saturated organic material and overburden, which supports old growth forest and scattered wetlands. The ridgeline surrounding Port Valdez ranges from 2,000 to 4,000 feet in elevation, with some higher peaks and several intersecting valleys and glaciers. Precipitation is abundant at 68 inches annually. Winds, temperature, precipitation, and atmospheric stability patterns in the project area are influenced by the local rugged terrain.

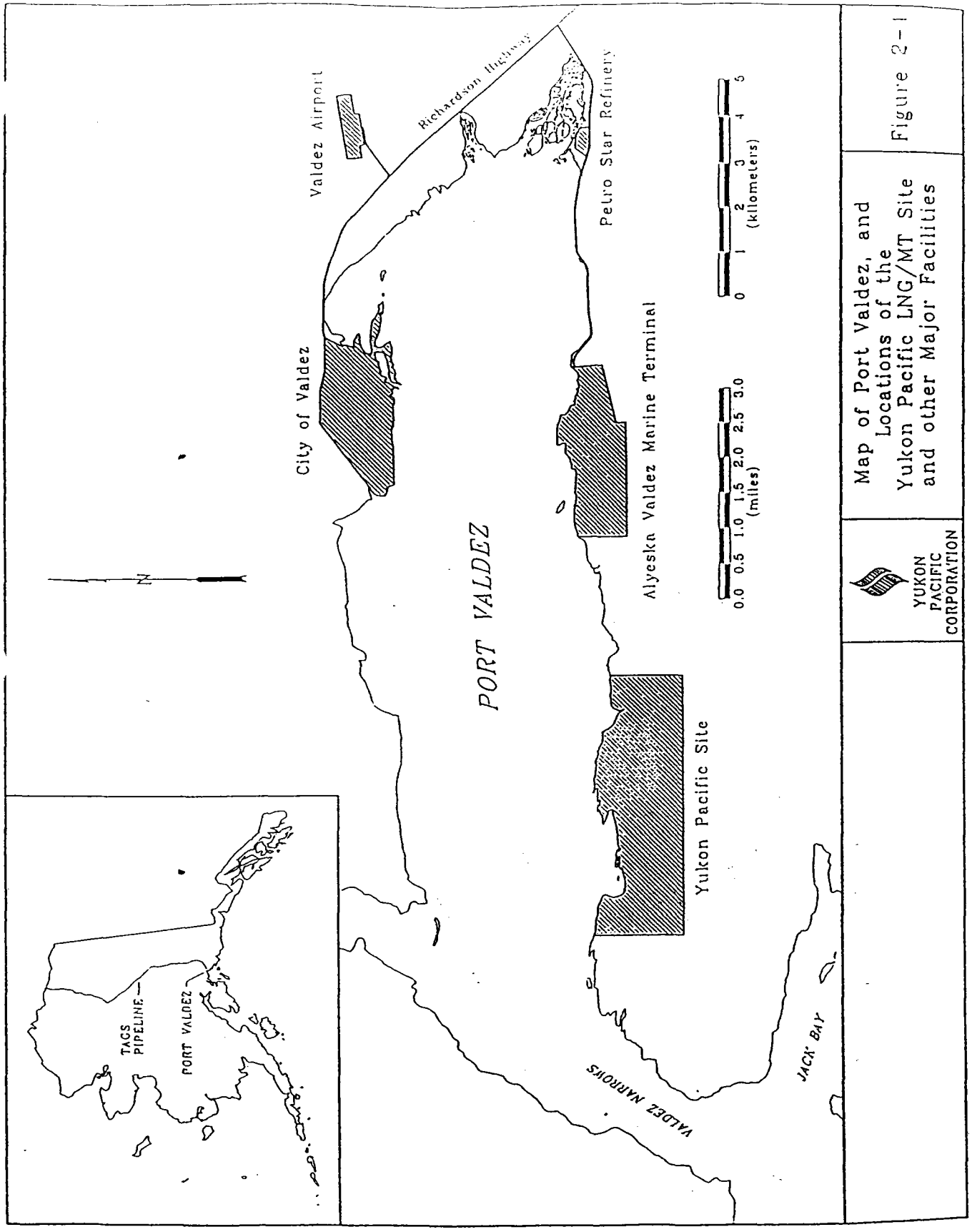

Figure 2-1

Map of Port Valdez, and Locations of the Yukon Pacific LNG/MT Site and other Major Facilities

AIR EMISSION SOURCES BY ID NUMBER

Train	A	B	C	D						
Propane Refrig. Comp.	1	8	15	22	Marine Flare	29	Steam Package Boiler	36	Turbine Genset 6	43
L-Press. MR Refrig.	2	9	16	23	Wet Process Flare	30	Incinerator	37	Turbine Genset 7	44
M-Press. MR Refrig.	3	10	17	24	LNG Tanker - Berth 1	31	Turbine Genset 1, HRSG	38	Fresh Firewater Pump	45
H-Press. MR Refrig.	4	11	18	25	LNG Tanker - Berth 2	32	Turbine Genset 2	39	Sea Firewater Pump	46
Flash Gas Compressor	5	12	19	26	Boil-off Compressor A	33	Turbine Genset 3	40	Sea Firewater Pump	47
Dryer React. Heater	6	13	20	27	Boil-off Compressor B	34	Turbine Genset 4	41	Inst./Plant Air Comp.	48
Dry Process Flare	7	14	21	28	Boil-off Compressor C	35	Turbine Genset 5	42		

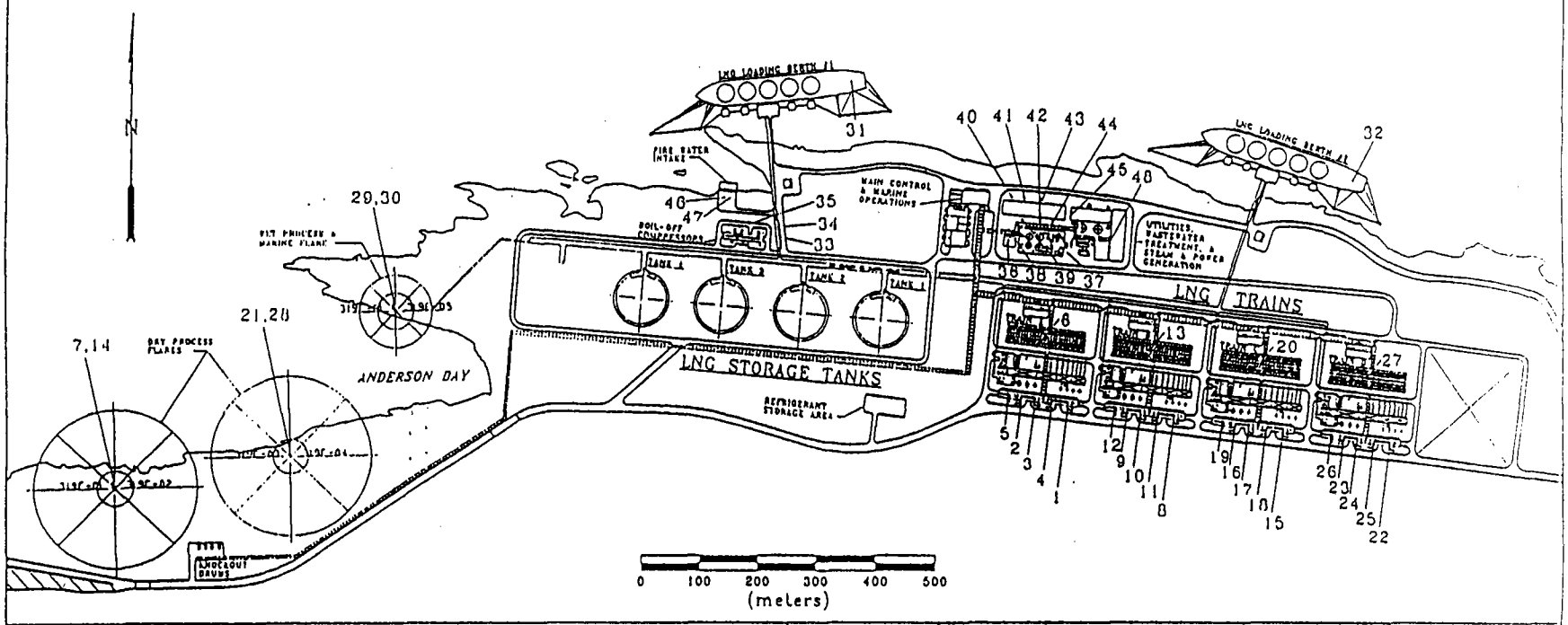

YUKON PACIFIC CORPORATION

General Layout of the Anderson Bay Facility and Operations Emission Points Anderson Bay, Alaska

Figure 3-2

Volume Source Descriptions

1 Dock/Staging, Concrete 1
2 Construction offices
3 Construction offices
4 Fill site A, Concrete 2
5 Fill site A
6 Fill site B'
7 LNG Tank bench, Fill B
8 LNG Tank bench, Fill B
9 LNG Tank bench, Fill B
10 LNG Train bench
11 LNG Train bench
12 LNG Train bench
13 Berth 1, Sediment pond
14 Utilities
15 Utilities
16 Utilities
17 Berth 2, Sediment pond
18 Construction camp 1
19 Construction camp 2
20 Construction camp 3

Point Source Descriptions

1 Cargo dock generator
2 Concrete plant 1 gen.
3 Construction office gen.
4 Construction office gen.
5 Concrete plant 2 gen.
6 Crusher plant generator
7 LNG Tank generator
8 LNG Tank generator
9 LNG Tank generator
10 LNG Tank generator
11 LNG Train generator
12 LNG Train generator
13 LNG Train generator
14 LNG Train generator
15 Utilities generator
16 Utilities generator
17 Utilities generator
18 Utilities generator
19 Construction camp 1 gen.
20 Construction camp 2 gen.
21 Construction camp 3 gen.
22 Waste incinerator
23 Construction camp 1 LPG
24 Construction camp 2 LPG
25 Construction camp 3 LPG

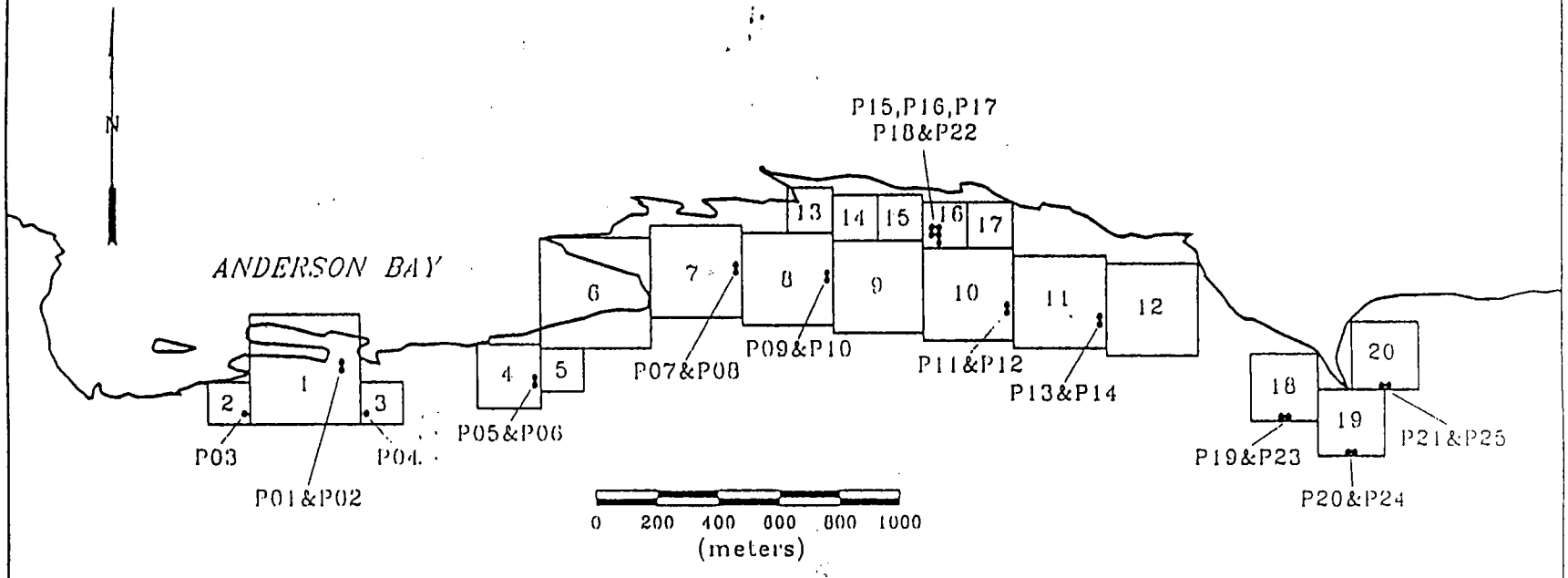

YUKON PACIFIC CORPORATION

Location of Volume Sources and Point Sources Used to Represent Anderson Bay Project Activities During Year 2 of the Construction Schedule

Figure A-2

The construction of the facility will take place over a nine-year period. Annual emissions during the construction period will vary depending on the construction activities and the length of construction season. Year 2 is projected to have the maximum annual construction emissions, as well as the maximum daily construction emissions. The applicant modeled Year 2 emissions to demonstrate compliance of NAAQS and PSD increment during the entire construction phase.

Table 2-1 Construction Schedule

Activity	Construction Year								
	0	1	2	3	4	5	6	7	8
Detailed Design/Procurement	■	■	■	■	■	■			
Site Clearing/Grubbing & Earthwork	■	■	■	■					
Cargo Dock & Construction Offices	■	■							
Construction Camps		■	■	■					
Utilities and Power Plant		■	■	■	■	■	■		
LNG Tank Foundations				■	■	■			
LNG Tank Erection					■	■	■		
LNG Process Train Construction					■	■	■	■	■
Marine Terminal/Berth Construction					■	■			
LNG Production							■	■	■

Year 0 activities include developing cargo docking and staging area, constructing offices; cutting main access road, constructing dam at seven mile creek; completing all clearing, grubbing, and initial grade work at construction camp 1; begin overburden and excess rock disposal in fill site B.

Year 1 activities include: completing all year 0 activities; developing, filling, and grading fill site A to accommodate a concrete batch plant; commencing excavation on LNG tank bench; completing earthwork on utility bench; installing solid waste incinerator; completing and operating camp 1; beginning site work for construction camps 2 and 3; clearing and grubbing on the LNG bench.

Year 2 activities produce the peak annual emissions during construction. These activities include: completing finish grade at fill site B to dispose of rock and overburden from the LNG and train benches; excavate LNG tank bench to finish grade and tank foundation; beginning earthwork and marine work on tanker berths; operating camp 2.

Year 3 activities include: finishing fill site B, construction foundations for LNG tanks 1, 2, & 3; beginning civil work for LNG trains A and B; beginning civil construction of tanker berths; operating construction camp 3.

Years 4 and 5 activities include: erecting LNG tanks 1, 2, & 3; completing tank 4 foundation and civil work; completing and constructing LNG trains A & B; completing marine terminal berths 1 & 2. Install flares for LNG trains A & B. The facility operates at partial capacity at the end of this period.

Years 6, 7, & 8 activities include operating the facility at partial capacity while completing construction on LNG trains C and D. The facility will be fully operational at the end of this period.

The estimated annual emissions of the five regulated contaminants during the construction phase at Anderson Bay are listed in Table A-1a located in Appendix A.

2.2 EMISSION SOURCES

Table 2-2 contains the process stream descriptions and emission sources associated with facility operation. Tables 2-2-A through 2-2-F list the individual point emission source inventory contained in the process streams for the applicant's facility operation. Table 2-3 lists the volume source facility's construction emission inventory. Table 2-4 contains the allowable emissions, the PSD thresholds, and the PSD applicability for the facility. Appendix A contains the spreadsheet used to calculate the allowable emissions for the process equipment only. Appendix E contains the facility's process diagrams (PD).

Table 2-2 Facility Operational Equipment

Principle Facility Process	PD#	ID No.	Equipment Description
Dehydration	2-4	A302H-01 B302H-01 C302H-01 D302H-01	4, Gas-fired heaters
Fractionation	2-5	see flare	flow to flare system
Refrigeration/Liquefaction	2-6 2-7	A304KT-01-04, B304KT-01-04, C304KT-01-04, D304KT-01-04, A-D305KT-02	16, GE Frame 5 turbines 4, EGT Typhoon turbines
Liquefied Natural Gas storage and tanker loading	2-8 2-9	324KT-01A-C	3, turbines-boil off compressors
Power Generation	n/a	331PT-01 through 331PT-07	7, Cat Solar Mars turbines 1, heat recovery steam generator (HRSG)
Steam Generation	2-10	331F-02	1, steam package boiler
Deriming	n/a	see flare	flow to flare system
Flare Systems	2-11 2-9	319F-01-04 324F-01 319F-05	4, Dry process flares 1, Wet process flare 1, Marine flare
Refrigerant Storage	n/a	see flare	flow to flare system
Waste Incinerator	2-12	no ID	1, fluidized bed incinerator
Firewater Pumps	n/a	333G-05A-B 333G-02	2, diesel seawater 1, diesel freshwater
Instrument Air	n/a	335K-02	1, diesel emergency compressor
LNG Tankers	n/a	No ID	2, LNG tanker berths

Table 2-2-A Operational Point Source Inventory: Process Train A

Source No.	Description[1]	Equipment Number	Date Installed	Typical Fuel	Design Capacity
1	Propane Refrigerant Compressor GE Frame 5 M 5382(c) turbine	A304KT-01	proposed	Natural Gas	363.4 MMBtu/hr (42,600 hp)
2	Low Pressure MR Refrigerant Compressor GE Frame 5 M 5382(c) turbine	A304KT-02	proposed	Natural Gas	363.4 MMBtu/hr (42,600 hp)
3	Medium Pressure MR Refrigerant Compressor GE Frame 5 M 5382(c) turbine	A304KT-03	proposed	Natural Gas	363.4 MMBtu/hr (42,600 hp)
4	High Pressure MR Refrigerant Compressor GE Frame 5 M 5382(c) turbine	A304KT-04	proposed	Natural Gas	363.4 MMBtu/hr (42,600 hp)
5	Flash gas compressor EGT Typhoon turbines	A305KT-02	proposed	Natural Gas	51.73 MMBtu/hr (6900 hp)
6	Drier Reactivation heater	A302H-01	proposed	Natural Gas	17.963 MMBtu/hr
7	Dry Process Flare Pilot (including compressor shaft VOC leakage)	319F-01	proposed	Natural Gas	2476 lb/hr

Table 2-2-B Operation Point Source Inventory: Process Train B

Source No.	Description	Equipment Number	Date Installed	Typical Fuel	Design Capacity
8	Propane Refrigerant Compressor GE Frame 5 M 5382(c) turbine	B304KT-01	proposed	Natural Gas	363.4 MMBtu/hr (42,600 hp)
9	Low Pressure MR Refrigerant Compressor GE Frame 5 M 5382(c) turbine	B304KT-02	proposed	Natural Gas	363.4 MMBtu/hr (42,600 hp)
10	Medium Pressure MR Refrigerant Compressor GE Frame 5 M 5382(c) turbine	B304KT-03	proposed	Natural Gas	363.4 MMBtu/hr (42,600 hp)
11	High Pressure MR Refrigerant Compressor GE Frame 5 M 5382(c) turbine	B304KT-04	proposed	Natural Gas	363.4 MMBtu/hr (42,600 hp)
12	Flash gas compressor EGT Typhoon turbines	B305KT-02	proposed	Natural Gas	51.73 MMBtu/hr (6900 hp)
13	Drier Reactivation heater	B302H-01	proposed	Natural Gas	17.963 MMBtu/hr
14	Dry Process Flare Pilot (including compressor shaft VOC leakage)	319F-02	proposed	Natural Gas	2476 lb/hr

Table 2-2-C Operational Point Source Inventory Process Train C

Source No.	Description	Equipment Number	Date Installed	Typical Fuel	Design Capacity
15	Propane Refrigerant Compressor GE Frame 5 M 5382(c) turbine	C304KT-01	proposed	Natural Gas	363.4 MMBtu/hr (42,600 hp)
16	Low Pressure MR Refrigerant Compressor GE Frame 5 M 5382(c) turbine	C304KT-02	proposed	Natural Gas	363.4 MMBtu/hr (42,600 hp)
17	Medium Pressure MR Refrigerant Compressor GE Frame 5 M 5382(c) turbine	C304KT-03	proposed	Natural Gas	363.4 MMBtu/hr (42,600 hp)
18	High Pressure MR Refrigerant Compressor GE Frame 5 M 5382(c) turbine	C304KT-04	proposed	Natural Gas	363.4 MMBtu/hr (42,600 hp)
19	Flash gas compressor EGT Typhoon turbines	C305KT-02	proposed	Natural Gas	51.73 MMBtu/hr (6900 hp)
20	Drier Reactivation heater	C302H-01	proposed	Natural Gas	17.963 MMBtu/hr
21	Dry Process Flare Pilot (including compressor shaft VOC leakage)	319F-03	proposed	Natural Gas	2476 lb/hr

Table 2-2-D Operational Point Source Inventory: Process Train D

Source No.	Description	Equipment Number	Date Installed	Typical Fuel	Design Capacity
22	Propane Refrigerant Compressor GE Frame 5 M 5382(c) turbine	D304KT-01	proposed	Natural Gas	363.4 MMBtu/hr (42,600 hp)
23	Low Pressure MR Refrigerant Compressor GE Frame 5 M 5382(c) turbine	D304KT-02	proposed	Natural Gas	363.4 MMBtu/hr (42,600 hp)
24	Medium Pressure MR Refrigerant Compressor GE Frame 5 M 5382(c) turbine	D304KT-03	proposed	Natural Gas	363.4 MMBtu/hr (42,600 hp)
25	High Pressure MR Refrigerant Compressor GE Frame 5 M 5382(c) turbine	D304KT-04	proposed	Natural Gas	363.4 MMBtu/hr (42,600 hp)
26	Flash gas compressor EGT Typhoon turbines	D305KT-02	proposed	Natural Gas	51.73 MMBtu/hr (6900 hp)
27	Drier Reactivation heater	D302H-01	proposed	Natural Gas	17.963 MMBtu/hr
28	Dry Process Flare Pilot (including compressor shaft VOC leakage)	319F-04	proposed	Natural Gas	2476 lb/hr

Table 2-2-E Operational Point Source Inventory: Other Emission Sources

Source No.	Description	Equipment Number	Date Installed	Typical Fuel Primary/ Secondary	Design Capacity
29	Marine Flare Pilot	324F-01	proposed	Natural Gas	100 lb/hr
30	Wet Process Flare Pilot	319F-05	proposed	Natural Gas	100 lb/hr
31	LNG tanker, Berth #1 (reduced load)	na	proposed	Natural Gas & fuel oil	58 MMBtu/hr total heat input
32	LNG tanker, Berth #2 (reduced load)	na	proposed	Natural Gas & fuel oil	58 MMBtu/hr total heat input
33	Boil-off compressor A	324KT-01A	proposed	Natural Gas	51.73 MMBtu/hr (6900 hp)
34	Boil-off compressor B	324KT-01B	proposed	Natural Gas	51.73 MMBtu/hr (6900 hp)
35	Boil-off compressor C	324KT-01C	proposed	Natural Gas	51.73 MMBtu/hr (6900 hp)
36	Steam Package Boiler	331F-02	proposed	Natural Gas/ Diesel	164 MMBtu/hr
37	Fluidized bed Incinerator	na	proposed	various	999 lb/hr
38a	Power Generating Turbine Caterpillar-Solar Mars90T12000	331PT-01	proposed	Natural Gas/	9829 ekw
				Diesel	9114 ekw
38b	Duct Burner heat recovery steam generator	331PT-01	proposed	Natural Gas Diesel	88.5 MMBtu/hr 88.5 MMBtu/hr
39	Turbine Generator 2 Caterpillar-Solar Mars90T12000	331PT-02	proposed	Natural gas	9829 ekw
				Diesel	9189 ekw
40	Turbine Generator 3 Caterpillar-Solar Mars90T12000	331PT-03	proposed	Natural Gas	9829 ekw
41	Turbine Generator 4 Caterpillar-Solar Mars90T12000	331PT-04	proposed	Natural Gas	9829 ekw
42	Turbine Generator 5 Caterpillar-Solar Mars90T12000	331PT-05	proposed	Natural Gas	9829 ekw
43	Turbine Generator 6 Caterpillar-Solar Mars90T12000	331PT-06	proposed	Natural Gas	9829 ekw
44	Turbine Generator 7 Caterpillar-Solar Mars90T12000	331PT-07	proposed	Natural Gas	9829 ekw

Table 2-2-F Point Source Inventory: Diesel Only Emission Sources
Operational Equipment

Source No.	Description	Equipment Number	Date Installed	Typical Fuel Primary/ Secondary	Design Capacity
45	Fresh Firewater Pump	333G-02	proposed	Diesel	470 bhp
46	Sea Firewater Pump	333G-05A	proposed	Diesel	1660 bhp
47	Sea Firewater Pump	333G-05B	proposed	Diesel	1660 bhp
48	Air Compressor	335K-02	proposed	Diesel	250 bhp

Table 2-3-A Construction Point Source Inventory

Source No.	Description	Date Installed	Typical Fuel Primary/ Secondary	Design Capacity
C1	Cargo Dock generator	proposed	Diesel	250 KW
C2	Concrete plant 1 generator	proposed	Diesel	250 KW
C3	Construction office generator	proposed	Diesel	150 KW
C4	Construction office generator	proposed	Diesel	150 KW
C5	Concrete plant 1 generator	proposed	Diesel	315 KW
C6	Crusher plant generator	proposed	Diesel	565 KW
C7	LNG Tank Generator	proposed	Diesel	250 KW
C8	LNG Tank Generator	proposed	Diesel	250 KW
C9	LNG Tank Generator	proposed	Diesel	250 KW
C10	LNG Tank Generator	proposed	Diesel	250 KW
C11	LNG Train Generator	proposed	Diesel	150 KW
C12	LNG Train Generator	proposed	Diesel	425 KW
C13	LNG Train Generator	proposed	Diesel	425 KW
C14	LNG Train Generator	proposed	Diesel	425 KW
C15	Utilities Generator	proposed	Diesel	360 KW
C16	Utilities Generator	proposed	Diesel	500 KW
C17	Utilities Generator	proposed	Diesel	500 KW
C18	Utilities Generator	proposed	Diesel	500 KW
C19	Construction Camp 1 generator	proposed	Diesel	800 KW
C20	Construction Camp 2 generator	proposed	Diesel	800 KW
C21	Construction Camp 3 generator	proposed	Diesel	800 KW
C22	Waste incinerator	proposed	Diesel	999 lb/hr
C23	Construction Camp 1 LPG	proposed	propane	n/a
C24	Construction Camp 2 LPG	proposed	propane	n/al
C25	Construction Camp 3 LPG	proposed	propane	n/a

Table 2-3-B Construction Volume Source Inventory

Source No.	Description
V1	Dock/Staging, Concrete 1
V2	Construction Offices
V3	Construction Offices
V4	Fill site A, Concrete 2
V5	Fill site A,
V6	Fill site B,
V7	LNG Tank bench, Fill B
V8	LNG Tank bench, Fill B
V9	LNG Tank bench, Fill B
V10	LNG Tank bench,
V11	LNG Train bench
V12	LNG Train bench
V13	Berth 1, Sediment pond
V14	Utilities
V15	Utilities
V16	Utilities
V17	Berth 2, Sediment pond
V18	Construction camp 1
V19	Construction camp 2
V20	Construction camp 3

Table 2-3-C Construction Activity Inventory

Description		Typical Fuel	Emission Factors (g/hp-hr unless noted)					See Table in Appendix A
			PM_{10}	SO_2	NO_x	CO	VOC	
Power Generation (P01-P25)	<= 447 KW	diesel	1.00	0.93	14.06	3.03	1.14	Table A-3
	>= 447 KW		0.18	0.92	10.89	2.40	0.32	
Soild Waste Incinerator	Biological Solids	various	0.44 lb/ton feed	18.0 lb/ton feed	1.70 lb/ton feed	2.10 lb/ton feed	3.20 lb/ton feed	Table A-4
	Other Solids		1.04 lb/ton feed	3.90 lb/ton feed	5.02 lb/ton feed	1.92 lb/ton feed	3.20 lb/ton feed	
LPG for Construction Camps		Propane	0.6 lb /1000 gal	1.57 lb /1000 gal	19.0 lb /1000 gal	3.2 lb /1000 gal	0.5 lb /1000 gal	Table A-5
Site Clearing Equipment		Diesel	0.95	0.89	9.56	4.47	1.04	Table A-6
Rock Excavation Equipment		Diesel	0.94	0.91	10.01	4.63	1.01	Table A-6
Overburden Equipment		Diesel	0.73	0.91	9.66	3.29	0.93	Table A-6
Support Equipment		Diesel	1.02	0.90	9.69	4.05	1.00	Table A-6
Support Equipment		Gasoline	0.06	0.25	4.79	198.00	9.05	Table A-6
Site Preparation (PM_{10} fugitive emissions)		n/a	0.017 tons/acre/ month	n/a	n/a	n/a	n/a	Table A-7

Table 2-4 Estimated Total Facility Operational Emission and PSD Applicability (tons per year)

	Estimated Annual Increase	Applicability Limit	PSD Review Required ?
Oxides of Nitrogen (NO_X)	4070	40	YES
Carbon Monoxide (CO)	1999	100	YES
Sulfur Dioxide (SO_2)	711	40	YES
Inhalable Particulates (PM_{10})	452	15	YES
Total Suspended particulates (TSP)	452	25	YES
Volatile Organic Compounds (VOCs)	411	40	YES
Lead (Pb)	0.1	0.6	NO
Flourides	0	3	NO
Sulfuric Acid Mist	<0.1	7	NO
Total Reduced Sulfur Compounds	0	10	NO
Hydrogen Sulfide (H_2S)	0	10	NO
Municipal Waste Combustor organics/ dioxins, furans	0	0.0000035	NO
Municipal Waste Combustor Metals	0	15	NO
Municipal Waste Combustor Acid Gases	0	40	NO

3.0 NEW SOURCE REVIEW

For each new or modified source subject to pre-construction review under PSD, the State of Alaska conducts a new source review. This includes defining the facility boundaries, defining the primary activity, defining the potential to emit as restricted by emission or operational limitations, determining the local area attainment status, and whether the source is subject to federal NSPS and other state regulations.

A facility owner and operator that proposes a new PSD major facility with projected emissions greater than the applicable thresholds listed in 18 AAC 50.300(h)(3)(B)(i)-(xvii) must employ BACT for each air contaminant emission source, which is further explained in section 4.0. The applicant is subject to review under the PSD provisions of the Alaska Air Quality Control Regulations because the NO_X, SO_2, CO, PM_{10}, and VOC emissions from the facility exceeds the applicable PSD significance thresholds.

3.1 NEW SOURCE PERFORMANCE STANDARDS

Federal NSPS are promulgated by the U.S. EPA. The intent of NSPS is to provide technology-based emission control standards. EPA may delegate to each State the authority to implement and enforce standards of performance for new stationary sources located in that state. EPA has not delegated authority of the NSPS to the Department, therefore all reporting required must be submitted to the EPA as well as the Department.

Onshore Natural Gas Processing

The entire facility is subject to NSPS Subpart KKK - Standards of Performance for Equipment Leaks of VOC from Onshore Natural Gas Processing Plants pursuant to 40 CFR 60.630(e). The facility equipment considered in wet gas service is equipment that contacts or contains the field gas containing at least 10% VOC before the extraction process. This equipment must have a leak detection and repair program per Section 60.633. Flares used in this process must comply with Section 60.18 using Method 22 to demonstrate flare's compliance with visibility standards. The affected equipment must comply with record keeping and reporting per 40 CFR 60.635 and 60.536, respectively.

Combustion Turbines

The facility's stationary gas turbines are subject NSPS Subpart GG because their heat inputs exceed 10.7 gigajoules per hour (10MMBtu/hr). The facility must comply with all applicable regulations included in Subpart GG. The Nitrogen oxide standard for this size turbine is 150 ppmv, corrected to 15% oxygen. The applicant proposed a BACT limit less than the NSPS limit, therefore since the BACT limit is more stringent than the NSPS, the applicant shall comply with the standard. The applicant shall comply with the sulfur dioxide standard by burning

natural gas containing less than 150 ppm sulfur, and fuel oil containing less than 0.8% sulfur by weight. The applicant complies with this standard by burning natural gas containing less than or equal to 4 ppm H_2S, and fuel oil containing less than 0.25% sulfur by weight. The applicant must monitor the sulfur content of the natural gas and distillate fuel oil used at the facility. The applicant must test the fuel per methods and procedures listed in 60.335. Performance tests are required in Section 60.8. Method 20 shall be used. The owner or operator shall determine ASTM D 2880-71 for liquid fuels and ASTM D 1072-80, D 3031-81, D 4084-82, or D 3246-81 for natural gas. The applicant is subject to reporting requirements in 60.334 and 60.7(c), periods of excess emissions.

Boilers/Heaters/Heat Recovery Steam Generator--Steam Producing Equipment

Steam generating units with a heat input rating greater than 100 MMBtu/hr are subject to NSPS Subpart Db. The facility boiler is subject to Subpart Db. Steam generating units with a heat input between 10 MMBtu/hr and 100 MMBtu/hr are subject to NSPS Subpart Dc. The heaters have a heat input less than 10 MMBtu/hr and are not subject to either NSPS.

Burner-Subpart Dc

The duct burner is located on a dual fuel-fired turbine (source 38) upstream from a heat recovery steam generator (HRSG) and serves to provide additional heat energy to the turbine exhaust prior to this HRSG. This unit is an affected facility as defined by 40 CFR 60.40c (Subpart Dc) because it was constructed after June 9, 1989, and has a heat input rating between 10 MMBtu/hr and 100 MMBtu/hr.

This burner is rated at 88.5 MMBtu/hr heat input and designed to burn primarily natural gas and burn distillate fuel oil as backup. The burner is subject to all requirements found in Subpart Dc. The burner has a heat input of greater than 75 MMBtu and therefore subject to the sulfur dioxide emission limit 0.5 lb SO_2/MMBtu requirement defined in 40 CFR 60.42c(d). The applicant proposes to comply with the standard by burning distillate fuel oil of no greater than 0.5% sulfur in accordance with 40 CFR 60.42c(d). This percent of sulfur in the distillate fuel oil correlates to 0.26 lb SO_2/MMBtu, which is less than the emission limitation.

Compliance with this standard can be determined from the fuel supplier as described in 40 CFR 60.48c (f)(1) by stating the fuel supplier's name and a statement from that company that the fuel complies with D396-78 specifications of distillate oil. Sections 60.44c(g) and 60.44c(h) describe compliance testing methods and procedures.

In addition to the sulfur dioxide standard, the duct burner must comply with the standard for particulate matter 40 CFR 60.43c(c), which states that units greater than 30 MMBtu/hr shall comply with the opacity standard less than 20% opacity, except for one six-minute period per hour, and shall not exceed 20% for any six-minute period except during startup, shutdown, or

malfunction. This standard does not require continuous monitoring for opacity per Section 60.47c(a). The applicant shall verify compliance with this particulate matter standard following performance testing methods and procedures using Method 9 as required by Section 60.46c(a)(7).

The Subpart requires record keeping and recording as described in Section 60.48c which include notification of startup 60.48c(a), fuel supply certification 60.48c(f)(1), recording fuel oil use 60.48c(g) and (h). The applicant shall maintain these records for at least two years.

Boiler- Subpart Db

The steam package boiler (source 36) is an affected facility under 40 CFR 60, Subpart Db, Standards of Performance for Industrial-Commercial-Institutional Steam Generating Units since it will be constructed after June 19, 1984, and will have a heat input rating greater than 100 MMBtu/hr. The unit is operated to bring the facility on-line from a cold start and when Source 38 turbine with HRSG is not operational or cannot meet the steam demand of the facility. This unit will operate on distillate fuel oil when supplies for natural gas are insufficient. When the HRSG is generating adequate process steam, the boiler will limit operation to 15% load while burning distillate fuel oil.

Sulfur percent reduction requirements are not applicable to facilities combusting fuel with a sulfur content by weight less than 0.5% as stated in 40 CFR 60.43b (j). Compliance with 40 CFR 60.45b (j) requires the facility to certify that it is burning low sulfur fuel less than 0.5% sulfur by weight by reporting and record keeping as required by 40 CFR 60.49b (r). The applicant shall obtain and maintain at the facility fuel receipts from the fuel supplier that the fuel complies with D396-78 specifications of distillate oil. Quarterly Reports need to be submitted to the EPA Administrator certifying only low sulfur fuel was combusted at the facility during the preceding quarter.

The applicant is subject to the particulate standard. The particulate limit for the facility's boiler is 0.10 pounds of particulate per million BTUs. The applicant is subject to the opacity standard under 60.43b. The facility must install an opacity monitor and is subject to all requirements of 60.48b.

A performance test is required under 60.46b. Additionally, this section requires nitrogen dioxide monitoring. If the facility uses fuel with a nitrogen content of less than 0.30% by weight, boiler has annual capacity of 10% (less than 876 hours per year at full load), and can demonstrate compliance with the 60.44b(1)(ii) of 0.2 lbs/MMBtu of NO_X emission limit during performance tests under 60.44b(j), the applicant is *not* required to install a NOx CEMS.

The applicant-proposed BACT limit of 0.08 lb of NO_X per MMBtu heat input is less than this NSPS limit; therefore the Department believes the applicant can comply with the NSPS NO_X

standard. If compliance with the 10% annual capacity limit cannot be met, the applicant must install an nitrogen dioxide continuous emission monitoring system on this boiler. The Department does not anticipate the NSPS limit being exceeded due to the more stringent applicant proposed BACT limit (EPA, 1997).

The facility must comply with all record keeping and reporting requirements contained in 60.49b. Some of those requirements include notification of startup, submission of CEMS performance test data, record fuel consumed daily, record annual capacity factor determined on a 12-month rolling average, and opacity records. The reports must be submitted to both EPA and the Department until such time as the EPA delegates its NSPS authority to the Department.

Waste Incinerator

The facility's incinerator (source 37) processes 999 pounds of waste per hour. The waste consists of biological sludge from the wastewater treatment plant, spent oils, and various solids generated on-site during construction and operation. Biological sludge will constitute 25 lbs/hr of the incinerator's design capacity.

The facility incinerator is not subject to NSPS Subpart Eb Standards of Performance for Municipal Waste Combustors because the incinerator processes less than 12 tons per day, which is below the 40 tons per day applicability threshold.

The facility incinerator (source 37) is not subject to NSPS Subpart E--Standards of Performance for Incinerators, because the incinerator processes less than 12 tons per day, which is below the 50 tons per day applicability threshold.

The facility incinerator (source 37) is not subject to NSPS Subpart O--Standards of Performance for Sewage Treatment Plants, because the incinerator processes an estimated 25 pounds per hour of sewage sludge (600 pounds per day), which is below the 10% composition or 2,205 pound per day applicability threshold.

Marine Tankers Boilers

NSPS Subpart Kb--Standards of Performance for Volatile Organic Liquid Storage Vessels Constructed after July 23, 1984, the marine tankers (sources 31 and 32), because Liquefied Natural Gas contains predominately methane which is not a volatile organic compound as defined and listed in 40 CFR 51.100(s), and it is exempt following 60.110b(d)(3) because it is permanently attached to a mobile vessel.

Distillate Fuel Oil Storage Tanks

There are four distillate fuel oil storage tanks proposed for this facility. Distillate fuel oil storage tanks are subject to Subpart Kb Standards of Performance for Volatile Organic Liquid Storage Vessels (Including Petroleum Liquid Storage Vessels) for which Construction, Reconstruction, or Modification Commenced after July 23, 1984.

The main tank holds 6,800 barrels (bbls) or 285,600 gallons, and is 24 feet high, 45 feet in diameter, having a volume of 1,081 cubic meters (m^3). The utility distillate fuel oil day tank is twelve-feet high with a fifteen-foot diameter. This tank's volume is 60 cubic meters and has a capacity of 350 bbls (14,700 gallons). Two smaller 10-barrel (420-gallon) tanks are used for the firewater pumps.

Section 60.116b(a) and (b) requires the applicant to keep readily accessible records showing the dimensions of the tank and an analysis showing the capacity of the tank. These records must be kept for the life of the tanks. Section 60.110b(b) exempts the two smaller 10 barrel (420 gallon) tanks and Section 60.110b(c) exempts the utility distillate fuel oil day tank from Subpart A and the rest of Subpart Kb, except for the above-mentioned records.

The main tank is subject to this subpart. This tank is a fixed roof tank with atmospheric breather vent. The pressure of the tank will remain at atmospheric pressure regardless of the contents of the tank. This tank is not subject to the Section 60.112b, VOC standard, as the product stored within the tank will not exceed a true vapor pressure of 3.5 kilopascals. This tank is exempt from the record keeping and reporting requirements except for the requirements listed in 40 CFR 60.116b(a) and (b).

No other source at the facility is subject to Federal NSPS.

National Emission Standards of Hazardous Air Pollutants

The EPA also promulgates National Emission Standards of Hazardous Air Pollutants (NESHAP). The intent of NESHAP is to protect the public from adverse heath effects caused by various chemicals or industrial operations. EPA may delegate to each state the authority to implement and enforce standards of performance for new stationary sources located in that state. The EPA has not delegated authority of the NESHAP to the Department; therefore all reporting required must be submitted to the EPA as well as the Department.

The facility incinerator is subject to NESHAP Subpart E--Mercury, because it is an affected source that incinerates dry wastewater treatment plant sludge as defined in 40 CFR 61.50. NESHAP has no minimum process threshold that would exempt this incinerator from complying with the requirements of this Subpart. The applicant may appeal directly to EPA to grant a waiver from applicable sampling and monitoring requirements. If a waver is not granted, the

applicant must demonstrate compliance of the emission standard in 40 CFR 61.52. The regulations require the applicant to demonstrate compliance via stack sampling, sludge sampling, and monitoring of emissions and operations as set out in 40 CFR 61.53, 61.54, 61.55, respectively.

No other source at the facility is subject to Federal NESHAP.

3.2 ALASKA EMISSION STANDARDS

Fuel Burning equipment and industrial processes at the facility are subject to specific visible emission, particulate matter, sulfur dioxide, and fugitive dust emission standards as listed in 18 AAC 50.055. The incinerator is subject to standards listed in 18 AAC 50.050. The marine tankers' boilers are subject to visible emission standards listed in 18 AAC 50.070. The Department has reviewed file documents and prepared monitoring, record keeping, and reporting requirements within the permit.

Visible Emissions

All fuel burning equipment emission vents and the incinerator (source 37) are subject to a 20 percent visible emission standard as listed in 18 AAC 50.055(a)(1) and 18 AAC 50.050(a)(2), respectively. The marine vessels are subject to their emission limitation in 18 AAC 50.070. Compliance with these provisions has been stated in conditions VI and VII of the Permit. The Department has required the Permittee to conduct visible emission surveillance once per month for the boiler, turbines, incinerator, and upon request for construction and other stationary sources.

The Department considers the marine vessels part of the facility while berthed and loading product and, therefore, the Department is requiring vessel surveillance under permit Condition VIII.

Particulate Matter

All fuel burning equipment and industrial process vents at the facility are subject to a particulate matter standard of 0.05 grains per dry standard cubic foot of exhaust gas (gr/dscf), as listed in 18 AAC 50.055(b)(1). Equipment burning natural gas will comply with the standard due to minimal particulate emissions from natural gas combustion based on stack tests from similar equipment. The boiler and duct burner are subject to NSPS opacity standards permitting less than 20% opacity. The incinerator has incorporated a venturi scrubber in the design, which will limit PM_{10} emissions to 0.5 lb/hr. The Department requires stack testing or final design calculations of exhaust flow of this unit to demonstrate compliance with the standard.

The Department has required the Permittee to conduct emission source tests of equipment at the facility upon request as set out in Condition II.D. The permittee shall stack test the dual-fired boiler and duct burner for particulate while completing the performance testing to comply with applicable NSPS. The turbine with the HRSG unit will be tested while firing distillate fuel oil. This unit should provide the worst-case scenario representing compliance for all the facility's turbines. The other equipment shall be tested at the Department's discretion.

Sulfur Oxides

All fuel-burning equipment and industrial process sources at the facility are subject to sulfur-compound emissions, expressed as sulfur dioxide, standard of less than 500 parts per million (ppm), averaged over a period of three hours, as listed in 18 AAC 50.055(c). Based on the applicant's request to burn distillate fuel oil in emergency situations with no greater than 0.25% sulfur content, the maximum short-term concentration will be 250 ppm which is less than 500 ppm, based on material balance. The applicant plans to burn natural gas with a hydrogen sulfide (H_2S) content no greater than 150 ppm, and distillate fuel oil containing no greater than 0.25% sulfur by weight.

To ensure compliance with low sulfur fuel requirements, the Department requires the applicant to monitor and report compliance with fuel sulfur limits as listed in Condition VII.

4.0 BEST AVAILABLE CONTROL TECHNOLOGY

Under the State Prevention of Significant Deterioration (PSD) Provisions of the Air Quality Control Regulations, the applicant subject to pre-construction review must show that the Best Available Control Technology (BACT) will be installed and used for each new or modified stationary source, prior to permit issuance. The Department considered stationary construction sources as an associated growth analysis as defined in State Air Quality Control Plan Volume II, revised October 30, 1983, page IV.F.3-4, therefore BACT is not required on construction sources. Non-stationary sources are exempted from BACT analysis because they do not meet the definition listed in 40 CFR 51.165(a)(1)(i) and (ii).

BACT is defined as an emission limit, which represents the maximum reduction achievable for each regulated air contaminant subject to pre-construction review under the PSD provisions of the Clean Air Act (CAA). Application of BACT will not result in emission of any pollutant which would exceed the emissions allowed by any applicable Federal standard listed in 40 CFR, Parts 60 and 61, NSPS, National Emission Standards for Hazardous Air Pollutants (NESHAP), or State Emission Standards in 18 AAC 50.040-055.

On a case-by-case basis, the Department, taking into account energy, environmental, and economic impacts, determines emission limits for new sources or modifications through the application of production, process, or available control systems and techniques. The Department identifies available control technology and evaluates the most effective control measure available for a similar stationary source for each pollutant. The Department evaluates economic feasibility of BACT by comparing the control cost of each available control technology.

As part of a complete application, the applicant must provide an adequate demonstration that the proposed emission control system represents BACT for the project. The applicant prepares an economic comparison of available technologies by summing the additional capital and operational costs for a given technology and dividing the cost sum by the air contaminant emission rate reduction of that technology. This results in an incremental cost for comparison with other technologies listed, in terms of cost per ton of air contaminant reduced. The lower the number, the less expensive it is to employ that technology.

The Department determines the economic feasibility threshold which reflects the appropriate site-specific level of control for the new or modified source.

If the Department determines that technological or economic constraints of the control system for a particular emission unit would make the imposition of an emission standard infeasible, the Department may prescribe a design, equipment, work practice, operational standard, or combination thereof, to satisfy the requirement for BACT. The Department will set forth the emission reduction achievable through implementation of such design, equipment work practice, or operation.

For this project, the evaluation is required for the following contaminants, subject to PSD review, are oxides of nitrogen (NO_X), sulfur dioxide (SO_2), carbon monoxide (CO), inhalable particulate (PM_{10}), and volatile organic compounds (VOCs).

The Department classifies control technologies by the process which the emission unit is controlled. The Department recognizes three types of control technologies for most fuel burning units: pre-combustion; combustion; and post-combustion controls.

Pre-combustion controls remove constituents from the fuel or feed material prior to combustion to reduce air contaminant formation. An example of a pre-combustion control is the use of low sulfur distillate fuel oil. This fuel has a lower sulfur content by weight, thus decreasing the amount of sulfur available to combine with oxygen and form sulfur dioxide.

Several combustion control techniques reduce NO_X emissions by reducing the available oxygen to form compounds with nitrogen, lower combustion temperature, and/or reducing the residence time at optimum nitrogen-oxygen reaction temperatures. Combustion controls are historically the most prevalent type of air pollution control.

Post-combustion controls are the most easily recognized method of pollution abatement. These technologies treat the effluent stream of the combustion process before emitting them into ambient air. Some examples include electrostatic precipitators (ESP) for particulate control, wet scrubbers for sulfur dioxide abatement, and selective catalytic reduction for NO_x emission control.

Post-combustion control of NO_X consists of flue gas treatment technologies designed to reduce NO_X formed during the combustion process. These technologies are used alone or in addition to combustion operation or equipment modifications. Flue gas treatment systems are classified as "selective" or "non-selective", depending on whether they selectively reduce NO_X or simultaneously reduce NO_X, unburned hydrocarbons, and carbon monoxide.

The Department may propose a balanced approach reducing all air contaminants in an optimized manner, rather than achieving the maximum degree of emissions reduction for a single air contaminant. An example of a combustion control that reduces one contaminant is fuel injection timing retard, which also results in a less efficient burn, with more fuel burned and increased emissions of CO, SO_2, PM_{10}, and VOC.

BACT Methodology: The Top-Down Approach

The methodology used to identify the BACT is the five-step "top-down" methodology set forth in the U.S. EPA's proposed *New Source Review Rule Revisions (U.S. EPA 1996)*.

In summary, the first step of the methodology surveys alternative control techniques and identifies all "available" control options. Available control options are those air pollution control technologies or techniques with a practical potential to reduce emissions from the emissions unit, and for pollutants under evaluation. To assist in identifying available controls, the Department reviewed the RACT/BACT/LAER Clearinghouse (RBLC) on the U.S. EPA's Technology Transfer Network bulletin board for the source categories in the analysis. If an identified control technology was not listed in the RBLC for a particular source type and pollutant, then that control technology was considered unavailable based on a lack of demonstration.

The second step in the top-down approach evaluates the technical feasibility of each available control option based on source-specific factors. The Department deems control options that would clearly result in technical difficulties precluding their successful use as technically infeasible.

Step three determines the effectiveness of control alternatives for all options not eliminated in step two. The Department ranks the control options in order of overall control effectiveness for the pollutant under review in a "top-down" manner. The Department will not further evaluate less efficient control technologies than the applicant has proposed.

Step four considers the energy, environmental, and economic impacts of control options beginning with the top-ranked, technically feasible, control alternative. If the most effective control option is shown to be inappropriate due to adverse economic, environmental, or energy impacts, then it is eliminated and the next most stringent alternative is evaluated. If the most stringent technology is selected as BACT, it is not necessary to continue the analysis.

Finally, under step five, the Department proposes the most effective control option not eliminated in step four as BACT for the pollutant and emissions unit under review.

4.1 CONTROL OF OXIDES OF NITROGEN (NO_X)

Construction/operation of the facility as restricted in the Air Quality Control Construction Permit would result in maximum allowable emissions of 4,070 tons each year which exceeds the 40 ton per year PSD applicability specified in 18 AAC 50.300(h)(3)(b)(i). NO_X BACT analysis is required for this facility.

4.1.1 Mechanisms of NO_X Formation

Combustion is defined as the rapid chemical combination of oxygen with combustible elements of a fuel. Combustion produces heat that can be manipulated to generate power. Most fuels have three combustible elements: carbon, hydrogen, and sulfur, which unite with oxygen from atmospheric air to produce heat. Atmospheric air is a mixture that contains roughly 79% nitrogen and 21% oxygen by volume. Nitrogen present in the combustion process combines with

oxygen and forms oxides of nitrogen. Oxides of nitrogen, when discharged into the atmosphere, can lead to ozone (O_3) formation and contribute to acid rain. The products of these pollutants can negatively affect human health, ecosystems, and building structures.

There are several types of oxides of nitrogen formed during the combustion process, but only two types occur in significant quantities: nitric oxide--NO, and nitrogen dioxide--NO_2. In stationary source combustion, most of the NO_X formed is NO, which can oxidize in the atmosphere to form NO_2, a regulated air contaminant. At high temperatures, NO formation is favored almost exclusively over NO_2 formation, and the rate of NO_2 dissociation to NO is favored by the mechanism: $NO_2 + O + \text{heat} \leftrightharpoons NO + O_2$.

After the flue gas exits the stack, the entrained NO may be oxidized back to NO_2 through a complex photochemical reaction with atmospheric oxygen.

There are three mechanisms for NO_X formation during combustion of certain fossil fuels. These formation mechanisms are thermal, fuel bound, and prompt NO_X. A brief discussion of each follows:

Thermal NO_X Formation

The predominant mechanism in combustion reactions is thermal fixation of the atmospheric nitrogen at elevated temperatures, usually greater than 2,800°F, known as thermal NO_X. Production of thermal NO_X is an exponential function of the flame temperature, and a linear function of the time the hot gas mixture is at that flame temperature. This mechanism follows the Zeldovich reactions, with three predominant paths for NO_X formation in combustion:

(1) $N_2 + O \leftrightharpoons NO + N$
(2) $N + O_2 \leftrightharpoons NO + O$
(3) $N + OH \leftrightharpoons NO + H$

Note that reaction (1), which is highly temperature dependent, provides the atomic nitrogen (N) necessary for reactions (2) and (3). Note further that the reverse reactions are not favored by the presence of molecular oxygen. Therefore, in the oxidizing environment that normally prevails downstream from the actual combustion zone due to the presence of excess combustion air, the NO which has been formed is essentially fixed.

Fuel-Bound NO_X

Chemically-bound nitrogen in the fuel is known as fuel-bound nitrogen. The oxidation mechanism is dependent on fuel-bound nitrogen content, fuel properties, and the stoichiometric conditions present during combustion. The most significant factors attributing fuel-bound NO_X

formation are chemically fuel-bound nitrogen content and the fuel-to-air ratio during the early stages of combustion when fuel-bound nitrogen is liberated from the fuel.

As the chemically-bound nitrogen in the fuel enters the flame zone, the fuel is burned into small reactive, nitrogenous organic molecules which react with oxygen to form NO. In a reduction environment where insufficient oxygen is present for complete combustion, such as the fuel-rich zone of combustion, the nitrogenous fuel fragments encounter and react with each other, and convert the fuel-bound nitrogen to molecular nitrogen (N_2).

Fuel-bound nitrogen can be a significant source of NO_X emissions from fossil fuels such as oil and coal, but no fuel-bound nitrogen is contained in natural gas. The Department typically uses the most conservative technique to estimate NO_X emissions due to fuel-bound nitrogen--assuming that all nitrogen in the fuel is converted to NO_X during combustion.

Prompt NO_X

Prompt NO_X is produced by the formation of an intermediary such as hydrogen cyanide (HCN), through the reaction of nitrogen radicals and hydrocarbons (HC),

$$NO + HC + H_2 \rightarrow HCN + H_2O$$

followed by the oxidation of the HCN to NO. The formation of prompt NO_X has a weak temperature dependence and a short lifetime of several microseconds. It is only significant in very fuel-rich flames, which are inherently low NO_X emitters.

4.1.2 Available and Technically Feasible Control Technology for NO_X

The applicant and the Department used the EPA RACT/BACT/LAER Information Clearinghouse summaries to identify BACT determinations on stationary sources similar to those in operation at the facility. This section details the control technology. The applicant proposed the following BACT, the Department imposed the limits listed in Table 4-1.

Table 4-1 BACT for NOx

Source Nos.	Description	Control Technology	Emission Limit
1-5; 8-12; 15-19; 22-26; 33-35; 38a, 39-44	Gas-fired turbines	Low NO_x combustors	25 ppmdv[A]
38a, 39	Diesel-fired turbines	Low NO_x combustors	125 ppmdv[A]
38b	Gas-fired duct burner	Low NO_x burners	0.10 lb/MMBtu

38b	Diesel-fired duct burner	Low NO_x burners	0.15 lb/MMBtu
36	Gas/diesel fired boiler	Low NO_x burners	0.10 lb/MMBtu
6,13,20,27	Gas-fired heaters	Low NO_x burners	0.14 lb/MMBtu
7,14,21,28-30	Flares	Proper Operation	0.068 lb/MMBtu
37	Incinerator	Proper Operation	1.70 lbs/ton[B] 5.02 lbs/ton[C]
45, 48	Diesel-fired internal combustion engines	Proper tuning	0.031 lb/hp-hr
46, 47	Diesel-fired internal combustion engines	Proper tuning	0.024 lb/hp-hr

[A] corrected to 15% O_2 and standard operating conditions
[B] biological waste emission factor
[C] other waste emission factor

4.1.2.1 Gas-fired and Distillate-Fuel-fired Turbines

The control technologies for oxides of nitrogen emissions from gas-fired turbines currently used in the United States consist of selective catalytic reduction (SCR), selective non-catalytic reduction (SNCR), non-selective catalytic reduction (NSCR), Low NO_X burners, water or steam injection, low nitrogen content fuel, or no controls.

There are twenty-eight natural gas-fired, one dual-fuel-fired turbine that contains a heat recovery steam generation (HRSG), and one dual-fuel-fired turbine located at the facility. The two turbines operate on distillate fuel oil for operation of the facility in case of natural gas supply interruption. The applicant has identified natural-gas fired turbines with dry low NO_X combustors that emit approximately 25 ppmv of NO_X corrected to 15% oxygen. It appears that additional controls may not reduce emissions substantially. The dual-fuel-fired turbines emit 125 ppmv of NO_X.

Selective Catalytic Reduction (SCR)

Selective catalytic reduction is used to supplement reductions from steam or water injection or combustion modifications. Carefully designed SCR systems can achieve NO_X reduction efficiencies as high as 90 percent. Ammonia slip levels as low as 3 to 5 ppm have been reported, with vendor guarantees of 10 ppm available.

The Selective Catalytic Reduction (SCR) systems use ammonia to selectively reduce NO_X to N_2. SCR injects ammonia into the exhaust before the exhaust enters the catalyst bed e.g., vanadium, titanium, or platinum-based) enclosed in a reactor. The reduction reaction occurs when the flue gas passes over the catalyst bed where the NO_X and ammonia combine to become nitrogen, oxygen, and water as follows:

$$4NO + 4NH_3 + O_2 \rightarrow 4N_2 + 6H_2O$$
$$2NO_2 + 4NH_3 + O_2 \rightarrow 3N_2 + 6H_2O$$

Excess oxygen favors the reaction of ammonia and NO_X.

The required catalyst bed temperature is dependent on the type of catalyst used, and must be maintained within a narrow temperature range for effectiveness. If a metal oxide catalyst such as vanadium or titanium is used, the effective temperature range is between 600-750°F. For a wider temperature range, zeolite catalysts have been shown effective for natural-gas-fired applications in the 575-900°F range. Due to its limited temperature window, SCR is best applied to new combined-cycle/cogeneration installations which have heat recovery equipment and no flue gas bypass provision. SCR is effective on some combined-cycle/ co-generation gas turbine which route only a portion of the turbine exhaust through the heat recovery steam generator (HRSG) and use the remainder for direct heating. The catalyst is located within the HRSG where temperatures are maintained within the required temperature window.

For simple-cycle configurations, the exhaust gas must be lowered to the required SCR operating temperature, thereby making SCR expensive for these configurations.

SCR systems must be properly designed to maintain the appropriate quantity of ammonia injection needed to effectively reduce NO_X emissions, while avoiding excess ammonia emissions downstream of the catalyst called ammonia "slip." The ammonia is a hazardous air contaminant that can be released in the flue gas. In addition, the catalyst that is used in the system must be able to withstand corrosion from the ammonia gas.

Temperature dramatically affects NO_X reduction because the catalyst exhibits optimum performance within a given temperature range of plus or minus 28°C (50°F). Below this optimum range, the catalyst activity is greatly reduced, allowing unreacted ammonia to "slip" through. This slip results in increased ammonia concentration in the exhaust gas and is discharged into the atmosphere. Above the range, ammonia begins to be oxidized to form additional NO_X. Further excessive temperatures may damage the catalyst.

This technology reduces both thermal and fuel-bound NO_2. Fuel-bound NO_2 is a concern for heavy fuel oils and coals with substantial fuel-bound nitrogen, but has little influence for lighter grade distillate fuels and natural gas as proposed at the facility.

Some catalysts are poisoned or fouled if exposed to sulfur. Sulfur poisoning renders a catalyst bed useless and causes premature replacement. Some sulfur-tolerant SCR catalysts are available, but are composed of vanadium pentoxide, a hazardous substance. However, these catalysts are still susceptible to some ammonium sulfate fouling. Transportation and disposal of the spent catalyst is difficult and expensive. Currently, there are no approved hazardous waste disposal sites in Alaska. The spent catalyst would have to be shipped to other states for disposal.

SCR is applied to gas turbines in electric utility service with heat recovery or steam generation capabilities. The catalyst temperature must be regulated within a narrow temperature "window" to be effective. Exhaust gas cooling must be added for those systems with exhaust gas temperatures in excess of the effective temperature range. Inlet temperature is controlled by installing the catalyst within a heat recovery system.

For diesel engines, heaters, and boilers with exhaust temperature lower than the temperature range, a gas reheating system is necessary to raise the temperature of the exhaust gas upstream of the catalyst bed. Not only would there be additional capital and operating expenses due to the installation of the gas reheater, additional use of fossil fuels to heat the flue gas would result in increased air contaminants.

SCR is an available and technically feasible technology. The Department will evaluate this technology further.

Dry Low-NO_X Controls

Dry Low-NO_X combustors reduce thermal NO_X emissions without injecting water or steam, but it does not reduce fuel-bound NO_X. Instead of using a lean premixed combustor, turbine designers use a rich/quench/lean staged combustor design. Air and fuel are injected directly in the combustion zone to mix and combust simultaneously. The products of this combustion are rapidly quenched using water or air, and combustion is completed in a fuel-lean secondary stage. The fuel rich first stage inhibits the formation of thermal NOx due to low oxygen levels. Secondary combustion temperatures are below NO_X formation temperatures due to the injected water/air acting as a heat sink. This design controls thermal and fuel NO_X. The control efficiency depends on the design, but generally ranges from 35-45%.

The applicant has identified gas turbines with dry low-NO_X combustors that emit approximately 25 ppmv of NO_X corrected to 15% oxygen. This technically available, feasible technology for natural gas-fired turbines will be evaluated further.

Steam or Water Injection

Steam or Water injection can also be referred to as wet controls. Injection of steam or water into the combustion zone decreases flame temperature, thus reducing the formation of thermal NO_X.

Wet controls act as a heat sink to reduce combustion temperature, which reduces thermal NO_X formation. To accomplish this, the steam or water must reach the primary flame zone by injection into the fuel, combustion air, or directly into the combustion chamber.

Water injection may be preferred over steam in many cases, due not only to its availability and lower cost, but also to its potentially greater thermal effect. Heat of combustion is absorbed by the water, lowering the combustion temperature. However, water injection may produce undesirable operating conditions, such as decreased thermal efficiency and increased equipment corrosion. This technique has the greatest operating costs of all combustion modification schemes, with a fuel and efficiency penalty typically about ten percent for utility boilers and about one percent for gas turbines.

Wet controls can increase carbon monoxide and volatile organic compounds because of lowered primary combustion temperatures.

Water or steam injection reduces NO_X emissions 60 to 94 percent in natural gas-fired turbines, and 79 to 90 percent for oil-fired turbines. Generally the reduction is 55-75%. Wet controls can remove emissions of approximately 25-50 ppmv corrected to 15% oxygen. Although this technology is technically feasible for the turbines, it can reduce NO emissions to 75 ppmv. This is a higher limit while burning natural gas than applicant-proposed BACT--low-NO_X Burners (LNB)- -with an NO_X limit of 25 ppmv. Dry controls for distillate-fuel-fired turbines emit 125 ppmv of NO_X, whereas wet controls will reduce emissions to 75 ppmv. Applying LNB instead of wet controls is an overall benefit to ambient air since natural gas is burned primarily. Applying LNB will reduce overall facility NO_X emissions than wet controls. The Department determined that wet controls appropriate for the emergency nature of fuel-oil-fired turbines when compared to the emission reductions provided by LNB. Wet controls will not be further evaluated for the facility's turbines.

Non-Selective Catalytic Reduction (NSCR)

Nonselective Catalytic Reduction (NSCR) systems reduce NO_X emissions 80-90 percent at a temperature between 800 and 1,200 degrees F. NSCR systems use a mixture of platinum and rhodium in the catalyst. Carbon monoxide and hydrocarbons (CH_4) act as reducing agents in the flue gas, reacting with NO_X to form N_2, H_2O, and carbon dioxide. The chemical reaction process is not fully understood, but can be represented in the following basic formulas:

$$CH_4 + 4NO_2 \rightarrow CO_2 + 4NO + 2H_2O$$
$$CH_4 + 2O_2 \rightarrow CO_2 + 2H_2O$$
$$CH_4 + 4NO_2 \rightarrow CO_2 + 2N_2 + 2H_2O$$
$$2CO + 2NO \rightarrow 2CO_2 + N_2$$
$$2H_2 + 2NO \rightarrow 2H_2O + N_2$$

NSCR is only effective in fuel-rich, preferable gas-fired, non-variable load combustion. The air-to-fuel ratio must be at or close to stoichiometric to provide adequate concentration of reducing agents in the exhaust gas. This combustion produces exhaust gas nearly depleted of oxygen--with less than four-percent oxygen. The inability to control air-to-fuel ratio for varying loads limits NSCR application.

It should be noted that use of certain oil additives (e.g., phosphorus, zinc) might result in catalyst poisoning. NSCR is best known for its application in reducing NO_X from automobile exhaust using a platinum/rhodium catalyst bed. The catalyst's effective temperature range lies between 600° and 950° F. NSCR uses no additional reactant for the control of NO_X.

The turbine exhaust is typically 15% oxygen, much greater than the 4% necessary for this technology. Therefore, the Department determines that this technology is not technically feasible and will not be considered further.

Selective Non-Catalytic Reduction (SNCR)

The SNCR systems selectively reduce NO_X without using catalysts. There are currently two commercially available SNCR systems, $DeNO_X$ and NO_XOUT. The $DeNO_X$ process injects gaseous ammonia (NH_3) into the air-rich flue gas to reduce NO_X to N_2. The NO_XOUT process injects a urea type (or amine salt) compound into the oxygen-rich and/or high temperature convection section of a boiler to promote NO_X reduction. The exact chemical mechanism is not fully understood, but involves the decomposition of urea ($C(NH_2)_2O$) and the reduction of NO by reaction with NH_2. Temperature is the primary variable for controlling the selective reactions in both systems.

Selective Non-Catalytic Reduction (SNCR) is similar to SCR, with the major difference being that in SNCR, NO_X reduction reactions occur in the gaseous phase in the temperature range of 1,600-2,200° F, eliminating the need for a catalyst. The process reduces nitrogen oxide (NO) by reacting with nitrogen-hydrogen or carbon-hydrogen based chemicals.

With SNCR, the ammonium or urea enters the flue gas via air or steam injection at a location that provides optimum reaction temperature and necessary resonance time. The optimal ammonia reaction temperature "window" occurs between 1,700 and 1,850 degrees F, but can be lowered to 1,300 degrees F through the additional injection of hydrogen. The optimal urea reaction temperature "window" occurs between 1,600 and 2,100 degrees F, and the residence time required depends on temperature.

The chemical reaction mechanism is quite complex, but the reduction can be represented by the following equations:

Ammonium injection

$$NO_X + NH_3 + {}_2 + H_2O + (H_2) \rightarrow N_2 + H_2O \quad \text{Reaction Equation}$$
$$NH_3 + O_2 \rightarrow NO + H_2O \quad \text{Oxidation Equation}$$

Urea injection

$$CO(NH_2)_2 + 2\,NO + \tfrac{1}{2}\,O_2 \rightarrow 2\,N_2 + CO_2 + H_2O$$

As with SCR, SNCR using ammonia, requires transportation, handling, and storage of ammonia, a hazardous substance. There is a potential of ammonia slip in the exhaust gas, increasing ammonia levels in the ambient air. The other technical problem for most applications is the physical ammonia or urea injection location. For equipment operating at various loads, the proper injection temperature "window" physically moves within the combustion zone and the exhaust ductwork. In order to optimize ammonia or urea utilization and avoid ammonia slip, many injection locations may be required. SNCR technology using urea can result in NH_3 slippage and a slight increase in CO, which are products of incomplete thermal decomposition of excess urea.

Due to elevated effective temperature ranges for SNCR, maintaining the temperature window could require the use of a variable heat recovery system or a gas reheating system, depending on the type of equipment. The reheating system would increase fossil fuel consumption and its associated air contaminant emissions in order to maintain the high temperature required for SNCR.

SNCR is not applicable to this application because it requires exhaust temperatures greater than 1,300 degrees F. The simple cycle gas turbines located at this facility operate at approximately 850-1,000 degrees F, and HRSG operates at lower temperatures. Also, the residence time required is not available in the turbine design.

The applicability of SNCR is primarily restricted to large industrial boilers and shall not be considered further for BACT for combustion turbines.

Low Nitrogen Content Fuel

Another control technology consists of conversion to a fuel with a lower nitrogen content or one that burns at a lower temperature, which results in a reduction of NO_X emissions. Combustion of natural gas or distillate oils tends to emit less NO_X than coal or heavy fuel oils. This

technology is applied due to the use of natural gas and distillate fuel as backup. Further reduction is not possible with this control technology.

4.1.2.2 Incinerator

A fluidized bed waste incinerator will be utilized to incinerate biological treatment sludge, construction and administrative wastes. The capacity of the unit is 999 lb/hr. A maximum of 25 lbs per hour will be biological solids. The combustion temperature ranges from 1,350° to 1500° F. The estimated NO_X emissions from continuous full-time operation are 11 tons per year. This is insignificant relative to the entire facility's emissions.

The control technologies for oxides of nitrogen emissions from waste fluidized-bed incinerators currently used in the United States consist of selective catalytic reduction (SCR), selective non-catalytic reduction (SNCR), non-selective catalytic reduction (NSCR), Low Excess Air (LEA), and Low Nitrogen Fuel, as discussed in Section 4.2.1.

Selective Catalytic Reduction (SCR)

For a detailed description, See Section 4.1.2.1.

SCR is a technically feasible control technology. This technology has never been applied to incinerators in Alaska. The control efficiency of SCR is approximately 90%. This is an insignificant emission reduction for the costs associated with installating the system; therefore this technology is not economically available. The control has excessive costs to be considered BACT for incinerators.

Selective Non-Catalytic Reduction (SNCR)

SNCR systems selectively reduce NO_X in the gaseous phase at a temperature range of 1,600-2,200° F, eliminating the need for a catalyst. For a detailed description, see Section 4.1.2.1.

The applicability of SNCR is primarily restricted to large industrial boilers.

SNCR is not applicable to this facility's incinerator due to size and difficulty applying the technology to this incinerator design. This technology is available but not cost effective due to the small amount of emissions for the incinerator. This technology will not be further evaluated nor discussed for BACT.

4.1.3.3 Duct burners, Heaters and Boilers

The facility contains the following duct burners, boilers, and heaters. One distillate-fuel/natural gas-fired duct burner (heat rated capacity 88.5 MMBtu/hr) is located in the exhaust stream prior to the heat recovery steam generator (HRSG) on one of the Caterpillar Solar-Mars 90 T 12000 turbines. One dual fuel-fired package boiler produces process steam in the event that the HRSG is not operational. There are four natural gas-fired heaters (heat rated capacity 17.96 MMBtu/hr each) that regenerate the molecular sieve gas dryers. These heaters are expected to operate about 2 hours out of every 48 hours, for an average of one hour per day.

The major types of combustion control alternatives applicable or potentially applicable to the facility's duct burner, boilers, and process heaters are SCR, SNCR, NSCR, Water Injection, Low-NOx burners, Flue Gas Recirculation, Overfire Air, Low Excess Air; and Reduced Air Pre-heat. Note that SCR, SNCR, Water Injection, and Low Nitrogen Content fuel technologies are explained in detail in Section 4.1.2.1.

Selective Catalytic Reduction (SCR)

Successful operation of an SCR system occurs if the catalyst is exposed to an exhaust stream that is not an oxidizing environment. The injection of a reducing agent, most commonly ammonia (NH_3) causes NO to preferentially react with the agent to form nitrogen and water rather than reacting with the excess oxygen. SCR requires a narrow temperature range to achieve optimum catalytic performance. For more information on SCR, see the turbine section 4.1.2.1.

In addition to tight operating temperature controls, the SCR process requires good control and continual adjustment of the ammonia injection rate to match the rate of NO_X formation, which is a function of numerous variables such as load, utilization, and timing. An ammonia deficiency causes nitric oxide to preferentially react with the excess oxygen, while an ammonia surplus results in the ammonia slip emitted into the atmosphere. SCR is most applicable to base-load operations.

SCR is technically feasible for the facility boilers, but at a cost greater than $5,000/ton NO_X removed (YPC, 1996). In addition, SCR operation has potential environmental hazards associated with the transportation, storage, and handling of ammonia. Due to these factors, the Department will not further discuss SCR as BACT for the heaters and boiler. SCR evaluated for the duct burner (HRSG) installed on one of the facility's turbines will be discussed further in the Turbine section.

Selective noncatalytic reduction (SNCR)

Selective noncatalytic reduction (SNCR) is a thermal denitrification process that also involves the injection of ammonia into the exhaust gases. The ammonia reduces NO_X to N_2 within a

narrow temperature range of 1,600 to 2,000° F without a catalyst. At these temperatures, an 80 to 90% NO_X emission reduction can be achieved. Since the optimum reaction temperature is very high, the applicability of SNCR is primarily restricted to large industrial boilers. For more information on SNCR, see the turbine section 4.1.2.1.

SNCR is not technically feasible because of the tight spacing inherent in the design of the facility's heaters and boiler. This size constraint causes problems not locating the injection ports and provided adequate residence time for the reaction to occur, resulting in ammonia emissions.

The Department does not consider SNCR to be an applicable BACT alternative for the applicant's boilers and heaters.

Non-selective Catalytic Reduction

NSCR is only effective in fuel-rich, preferable gas-fired, non-variable load combustion. The air-to-fuel ratio must be at or close to stoichiometric to provide adequate concentration of reducing agents in the exhaust gas. This combustion produces exhaust gas nearly depleted of oxygen--with less than four-percent oxygen. The inability to control air-to-fuel ratio for varying loads limits NSCR application. For additional technology description, see Section 4.1.2.1.

This technology is not technically feasible for the facility's heaters and boiler.

Water Injection

In boilers, the flame temperature is reduced and reduces oxygen content in the combustion zone, therefore reducing fuel NO_X as well. See turbine Section 4.1.2.1 for a detailed description of the technology. This technique has the greatest operating costs of all combustion modification schemes, with a fuel and efficiency penalty typically about ten-percent for utility boilers. Wet controls can increase carbon monoxide and volatile organic compounds because of lowered primary combustion temperatures.

Low NO_X burners

Low-NO_X burners can be installed in many industrial, commercial, and institutional boilers. They are classified as staged air, staged fuel, and internal flue gas recirculation-type burners. Staged air burners' initial combustion takes place in a fuel-rich reducing atmosphere in which N_2 is formed rather than NO_X. Staged fuel burners separate the combustion zone into two regions: fuel lean followed by fuel rich. The stoichiometric amount of combustion air is supplied with partial fuel, and then the rest of the fuel is emitted into the combustion zone.

Typical excess air of these sources ranges from 10 to 30 percent. Internal flue gas recirculation and staged combustion is a new burner design developed to achieve compliance with stringent

California NO_X standards. These burners use a venturi effect to recirculate hot, oxygen depleted flue gas from combustion back into the primary combustion zone. The venturi effect is created by fuel and/or steam injection in burner tips. This reduces the oxygen concentration in the flame without reducing the temperature below optimal combustion efficiency. This control will be evaluated with Low NO_X burners.

Off-stoichiometric or staged combustion air method breaks down the combustion process into two stages: primary and secondary combustion. Primary combustion is the first stage of combustion conducted in a fuel-rich combustion zone. Combustion is then completed at lower temperatures in a secondary, fuel lean zone.

Insufficient or sub-stoichiometric oxygen introduced with the primary combustion air into the high temperature, fuel-rich zone reduces fuel and thermal NO_X formation. Combustion in the secondary zone is conducted at a lower temperature reducing thermal NO_X formation. This approach can be used for combustion of all fossil fuels. Operational modification incorporating the staged combustion concept include biased burner firing, burners out of service, and overfire air. Equipment modifications, such as low-NO_X burners, incorporate the staged combustion concept.

Low NO_X burners are technically feasible for duct burner, steam boiler, and process heaters, and are incorporated in the burner design. This technology includes flue gas recirculation and stage combustion by design.

Flue Gas Recirculation (FGR)

Flue gas recirculation (FGR) involves the forced return of the flue gas. This mixes with air for use in the primary combustion zone. 15-30% of the combustion air will be inert flue gas, which contains less oxygen and nitrogen as ambient air. The recirculation of the flue gas dilutes the combustion reactants, reduces peak flame temperatures, and again reduces oxygen concentrations.

The basic principal of FGR is to replace a portion of the incoming combustion air with exhaust gas. At full load this results in a richer burn with more gases to be heated by combustion. FGR reduces NO_X formation by reducing oxygen content and by acting as a heat sink that lowers peak combustion temperatures. NO_X removal of up to 40% is achievable by using a maximum of 30% recirculated exhaust gas. Flue gas recirculation systems are commercially available, therefore technically feasible. FGR with LNB can reduce NO_X emissions up to 71%.

FGR is a technically feasible technology. This technology will not be evaluated separately, but rather with low NO_X combustors since this technology is part of the combustor design.

Overfire Air

Off-stoichiometric combustion includes the following control technologies: overfire air, burners-out-of-service, and biased burner firing.

The Overfire Air (OFA) technique generally is not available for boilers with capacities less than 25 MMBtu/hr. OFA is applicable only to boilers with special burner design.

In regard to the NO_X removal efficiency of OFA, performance test data reported by EPA for three small gas-fired boilers, ranging in size from 22 to 56 MMBtu/hr, showed that controlled levels in the range of 0.073 to 0.142 lb/MMBtu were achieved, with emission reductions of 13 to 73 percent reported. Data for a 22 MMBtu/hr boiler burning distillate oil showed that emissions were reduced from an uncontrolled level of 0.154 lb/MMBtu to a controlled level of 0.125 lb/MMBtu, an emission reduction of 19 percent.

Overfire air is generally only available for large boilers, but it would provide the same reductions as low NO_X burners. This technology is available, but will not provide additional reductions than the applicant-proposed BACT; therefore the Department will not evaluate this technology further.

Low excess air (LEA)

Low Excess Air (LEA) control systems optimize the amount of air available for combustion. Optimizing the combustion air supply reduces both fuel consumption and thermal NO_X formation.

Low Excess Air (LEA) firing primarily reduces thermal NO_X. It is most effectively used with units burning natural gas and distillate fuel oil. Low excess air controls can be applied to all small boilers equipped with forced-air burners. For boilers equipped with natural draft burners, LEA cannot be used since excess air levels cannot be controlled.

Typical excess air of these units range from 10-30 percent. This control is technically feasible for these units and will be utilized to maximize combustion efficiency according to manufacturer's recommendation while maintaining safe operation of the equipment. Because LEA firing primarily reduces thermal NO_X, it is most effectively used with units burning natural gas and distillate fuel oil, as is the case with this facility. All combustion equipment proposed for this facility is designed for LEA firing to maximize thermal efficiency. This technology will not be discussed separately because it is inherent in the design of these units.

Reduced air preheat

Combustion air preheated improves combustion efficiency of the units. Two-percent efficiency is gained for every 100° F rise in combustion air. Increase in combustion efficiency increases NO_X emissions. Reduced air preheat is used only with combustion units that have air preheaters; normally these are large boilers. The process heaters have preheaters. These heaters are not used often (1 hour per day), and this technology will increase fuel use and CO, VOC, and particulate emissions, therefore this control will not be further evaluated due to environmental effects of increased emissions.

4.1.2.4 Diesel-fired Internal Combustion Engines

There are four diesel-fired internal combustion engines in this facility. Three are used to drive firewater pumps and the other drives an emergency backup air compressor.

The applicant included pre-combustion, combustion, and post-combustion technologies. The technologies included are selective catalytic reduction (SCR); non-selective non-catalytic reduction (NSCR); selective non-catalytic reduction (SNCR); fuel injection timing; intake air humidification and cooling; increased excess air; low nitrogen fuel in their BACT analysis. Low nitrogen fuel, natural gas, cannot be utilized due to emergency natural of these engines. This technology will not be evaluated further. The Department reviewed each of these technologies to determine possible BACT for this facility.

The most widely used, commercially available NO_X control technology in electric utility service is the use of fuel injection timing retard (FITR).

Selective Catalytic Reduction

See the turbine section 4.1.2.1. This post-combustion control technology is capable of 60% to 80% reduction of NO_X in diesel engines, and 90% in natural gas-fired engines (EPA, 1992). This technology is not available because the single-cycle engine exhaust temperature of 900° to 1,100° F is above the acceptable range of SCR. In addition, the cyclical operation and the small sizes of most facility engines create difficulty in applying this technology. This technology is technically unfeasible for the facility's internal combustion engines. A recent Department decision also rejected SCR due to manufacturer's recommendation that I/C engine design tolerated FITR more than SCR for NO_X control. Additionally, the hazards of transporting, handling, and storing ammonia outweigh the benefits of further emission reductions SCR would control.

Non-Selective Catalytic Reduction (NSCR)

NSCR is only effective in fuel-rich, preferable gas-fired, non-variable load combustion. The air-to-fuel ratio must be at or close to stoichiometric to provide adequate concentration of reducing agents in the exhaust gas. Stoichiometric combustion produces exhaust gas nearly depleted of oxygen (less than four percent oxygen). The inability to control air-to-fuel ratio for varying loads limits NSCR application for internal combustion engines. NSCR is best known for its application in reducing NO_X from automobile exhaust. NSCR uses no reactant for the control of NO_X. For additional information on this technology, see turbine Section 4.1.2.1.

The Department considers NSCR to be an infeasible BACT alternative for the applicant's diesel-fired engines since they operate fuel-lean. NSCR is not technically feasible due to the inability to operate diesel engines fuel-rich as the technology demands.

Selective noncatalytic reduction (SNCR)

Selective noncatalytic reduction (SNCR) is a thermal denitrification process that also involves the injection of ammonia into the exhaust gases. The ammonia reduces NO_X to N_2 within a narrow temperature range of 1,600 to 2,000° F without a catalyst. At these temperatures, an 80 to 90% NO_X emission reduction can be achieved. Since the optimum reaction temperature is very high, the applicability of SNCR is primarily restricted to large industrial boilers, not engines. For more information on SNCR, see the turbine section 4.1.2.1.

SNCR is not technically feasible because of high temperatures and residence required. An additional heating unit would have to be installed to apply this technology, increasing fuel consumption and associated emissions.

Due to the limited operation of emergency engines and small size of the applicant's compressor, the Department does not consider SNCR to be an applicable BACT alternative for the applicant's engines.

Fuel Injection Timing Retard (FITR)

Fuel Injection Timing Retard (FITR) is the delay of fuel injection into the combustion chamber. This delay causes the ignition of some of the fuel/air mixture in the combustion chamber during the expansion stroke, rather than the compression stroke. Consequently, the maximum combustion temperature and pressure are reduced, which inhibits the formation of thermal NO_X. This technology (FITR) is applicable to fuel injected, compression-ignited diesel-fired engines. FITR is technically feasible for the facility's diesel-fired engines. This technology can reduce emissions up to 5% per degree of timing retard. This technology is available and technically feasible, but will not be evaluated further due to the limited operation and emergency nature of the firewater pumps and the compressor's small size and limited use.

Intake Air Cooling

Turbocharged engines compress combustion intake air, increasing the amount of air charged to the cylinder, which increases the combustion intensity and engine efficiency. This results in higher thermal NO_X emissions, as the average gas temperature over the cycle is increased. To reduce emissions, a turbocharged engine contains a contact-water heat exchanger located downstream from the turbocharger, called an intercooler or aftercooler that removes some of the heat generated by the compression of intake air. The cooler intake air reduces peak chamber temperatures, thus reducing thermal NO_X formation.

The aftercooler temperature can be further reduced by supplying a separate cooling water source for the aftercooler. This low NO_X technique requires a separate, dedicated radiator for the cooling water circuit. Lowering the intake air temperature may result in overall reduction in exhaust NO_X emissions by a few percent.

This technology is available and technically feasible, but will not be evaluated further due to the limited operation and emergency nature of the firewater pumps and the compressor's small size and limited use.

Intake Air Humidification

Intake air humidification for reciprocating engines has been researched to reduce the formation of thermal NO_X. The humidified air acts to reduce the flame zone temperature in the combustion chamber, which theoretically reduces the amount of NO_X formed.

Intake air humidification is preferred to water/steam injection in reciprocating engines. Early water injection experiments resulted in hot spots on the cylinder head and valves, misfiring, knocking, and catastrophic crankshaft failures. There is one current demonstration project for intake air humidification. Source test results to date indicate an insignificant reduction in NO_X and an increased amount of unburned hydrocarbon emissions. Humidity control is only effective when the ambient relative humidity is low. This technology is not technically feasible due to the typically high relative humidity in Valdez. This technology needs low ambient humidity to be effective; therefore it will not be evaluated further for BACT.

Increased Excess Air

Increased excess air lowers the flame temperature and reduces formation of thermal NO. This causes incomplete combustion, which increases CO, VOC, and particulate emissions. This technology is available and technically feasible, but will not be evaluated further due to the limited operation and emergency nature of the firewater pumps and the compressor's small size and limited use.

4.1.2.5 Flares

The purpose of a flare is to allow the operation and shutdown of the facility in a safe and orderly manner (YPC, 1996). The facility contains four flares used to combust waste gases. No indentified NO_X emissions control technology is available to control emissions from flaring operations. NO_X control strategies for flares are expected to increase smoke, CO, PM_{10}, and VOC emissions. The fuel at the facility is predominately methane, which burns smokeless, whereas heavy hydrocarbons can cause smoke. Steam or air injection in the flare causes turbulence to complete combustion.

Operate per design

Although not a NO_x control technology, the Department concurs with the applicant that operating the flares per the manufacturer's design ensures complete combustion. Complete combustion will minimize CO, VOC, and particulate emissions.

Low Nitrogen content Fuel

Fuel that contains low nitrogen content will have less nitrogen available to form NO_X emissions. This technology is available and feasible.

4.1.3 Impacts of Available and Technically Feasible Control Technologies for NO_X

Available and technically feasible control technologies were further evaluated for economic feasibility and environmental impact.

4.1.3.1 Natural Gas and Distillate-fuel-fired Turbines

SCR

The most effective NO_X control is SCR, which can reduce emissions up to 95%. This technology reduces emissions by approximately 2,000 tons of NO_X per year, lowering the flue gas concentration from 25 ppmv to 9 ppmv corrected to 15% oxygen (YPC, 1996). This is a reduction of 65% or 95% from uncontrolled turbine emissions.

Using SCR has some adverse environmental concerns. The transportation, storage, and handling of ammonia has inherent risks. Ammonia is defined by EPA as a hazardous substance, which is more acutely toxic than NO_X emissions. The facility would require 805 tons per year of ammonia for the SCR application. The ammonia slip is 10 ppm depending on proper operation of the system. Any malfunctions will release greater quantities of ammonia into the atmosphere.

The applicant has prepared an economic analysis of applying SCR to each of the proposed turbines. The results of those analyses are summarized. The GE Frame 5 turbines cost $22,100 per ton NO_X removed. The Solar Mars 90 turbines cost $15,400 per ton NO_X removed. The EGT Typhoon turbines cost $36,400 per ton NO_X removed. These costs do not include increased energy needed to operate the system. Detailed economic analysis is included in Appendix C.

Due to costs in conjunction with potential adverse environmental impacts associated with this technology, the Department determines that SCR is not economically feasible for this application.

Dry Low NO_X Controls

All turbine candidates have available from the manufacturer Low NO_X combustors for natural gas combustion. This technology reduces NO_X emissions approximately 85% from uncontrolled units (YPC, 1996). The technology emits flue gas with a NO_X concentration of 25 ppmv corrected to 15% oxygen while burning natural gas. Turbines burning distillate fuel oil emit flue gas with a maximum expected NO_X concentration of 125 ppmv corrected to 15% oxygen of NO_X. Only two turbines can burn distillate fuel as alternative fuel. These two units fire distillate fuel oil during periods of insufficient natural gas supply for emergency operation of the facility.

Water Injection

Wet controls will reduce the turbine's NO emissions to 75 ppmv, which is higher than the applicant-proposed BACT. The Department considers Dry Low NO_x controls with a limit of 25 ppmv while burning natural gas. Water injection will reduce emissions below the applicant-proposed BACT limit of 125 ppmv while burning distillate fuel in the two dual-fuel-fired turbines. This control will not provide overall facility BACT and the Department considers water injection not appropriate for the facility's twenty-eight natural gas-fired and two dual-fuel-fired turbines.

4.1.3.2 Incinerator

The fluidized bed solid waste incinerator uses operation by design using good combustion management and operating at low excess air. There are no increased economic costs or adverse environmental concerns associated with these technologies.

The Department determines operating by design using low excess air is economically feasible for the facility fluidized bed incinerator.

4.1.3.3 Duct burner, Steam boiler and Heaters

Technically feasible control technologies for the facility's heaters and boilers are further discussed below. Control technologies including SCR for the duct burner are discussed in the turbine Section 4.1.3.1.

Low NO_X burners (LNB) combined with Flue Gas Recirculation (FGR)

FGR is included in the LNB design. The boiler will typically operate as a hot standby unit (anticipated 14% of capacity). The unit will operate at full load when needed to supplement the HRSG. YPC estimates NO_X emissions at 20% of the AP-42 emissions for the boiler operating at 30% load. The heaters will operate at a maximum of two hours per day.

LNB are available for the heaters, Steam boiler, and the duct burner. The applicant has provided economic analysis of this equipment. LNB for the heaters costs $7,000 per ton of NO_X removed. LNB for the steam boiler costs $2,900 per ton of NO_X removed. LNB is available for the duct burner inherent in its design (YPC, 1996). No additional energy impacts are anticipated. Appendix C contains the cost analysis for the natural gas-fired heaters and the dual-fired boilers. LNB is economically feasible for these units.

Low Excess Air (LEA)

This control is currently being utilized to the extent that is recommended by the manufacturer.

The Department considers this technique BACT, but will not achieve any additional decrease in NO_X emissions.

4.1.3.4 Diesel-fired Internal Combustion Engines

As described in Section 4.1.2.4, three engines power fire pumps and one 250 hp engine that operates an air compressor. Due to the limited and emergency operation of the engines, the Department considers no controls as BACT.

4.1.3.5 Flares

As discussed in Section 4.1.2.5, there are no controls available for flare operations. Operate per smokeless design is BACT for the facility's flares.

4.1.4 Final BACT Determinations

4.1.4.1 Turbines

The Department has determined Dry Low NO_X controls as BACT for oxides of nitrogen for the facility's turbines. The turbines' exhaust gas is limited to 25 ppmv corrected to 15% oxygen while burning natural gas. The two dual-fired turbines are limited to 125 ppmv corrected to 15% oxygen while burning distillate fuel oil.

4.1.4.2 Incinerator

The Department has determined operation at peak efficiency and low excess air per manufacturer's design with BACT for oxides of nitrogen for the facility's incinerators.

4.1.4.3 Duct burner, Steam boiler and Heaters

The Department has determined Low NO_X burner operation at low excess air peak efficiency per manufacturer's design as BACT for oxides of nitrogen for the facility's duct burner, steam boiler, and heaters. The emission limitation for the heaters, boiler, and burner are listing in Table 4-1.

4.1.4.4 Diesel-fired Internal Combustion Engines

As described in Section 4.1.2.4, three engines power fire pumps and one 250 hp engine that operates an air compressor. Due to the limited and emergency operation of the engines, no NO_X controls are considered BACT.

4.1.4.5 Flares

The Department has determined that operating in accordance with smokeless design represents BACT for the facility's flares.

4.2 CONTROL TECHNOLOGY FOR SULFUR DIOXIDE (SO_2)

The operation of this proposed facility results in the potential sulfur dioxide emission of 711 tons per year which exceed the 40 ton per year threshold for PSD review specified in 18 AAC 50.300(h)(3)(B)(iii). SO_2 BACT is required for this facility. Regardless of BACT determination, sulfur dioxide emissions from all equipment except the incinerator may not exceed 500 ppm averaged over a period of three hours as discussed in Section 3.2.

4.2.1 Mechanism of SO_2 Formation

Sulfur is an undesirable constituent of certain fuels that not only contributes to air pollution, but also causes corrosion of combustion equipment. Sulfur dioxide emissions from the proposed facility are solely dependent on the sulfur content in the fuel.

The thermal formation of SO_2 is caused by oxidation or the conversion of hydrogen sulfide, organic and pyrolitic sulfides (such as iron pyrite, FeS) in the fuel, to SO_2 during combustion.

(1) $S + O_2 \rightarrow SO_2$
(2) $4FeS + 7O_2 \rightarrow 2Fe_2O_3 + 4SO_2$

4.2.2 Available Control Technology for SO_2

There are two categories of control technologies previously determined for other projects to be BACT for SO_2: pre-combustion fuel treatment and flue gas desulfurization.

Pre-combustion Controls

Pre-combustion controls of SO_2 can be done by chemically or physically treating the fuel to remove sulfur prior to combustion.

Chemical treatment is usually done to fuel oils by hydro-desulfurization or hydro-treating. This process converts sulfur to gaseous hydrogen sulfide by contacting the liquid fuel with hydrogen in the presence of a catalyst. The catalyst is usually cobalt oxide, molybdenum oxide, and alumina. The gases are separated from the fuel and collected. This is a current technique used to reduce the sulfur content to less than 0.5% in liquid fuels. Natural gas from the North Slope reservoirs will pass through a conditioning plant that removes water, carbon dioxide, and hydrogen sulfide (H_2S), as well as pentane and heavier hydrocarbons. The gas leaving the North Slope will be "LNG" quality and will need no further conditioning prior to liquefaction. The expected content of H_2S is less than 4 ppm.

Flue Gas Desulfurization (FGD)

Flue gas desulfurization technologies can be classified as either wet or dry, according to final form of the waste product produced. The common dry FGD processes, such as spray drying and dry injection, form a dry solid waste product. In the wet process, the SO_2 by-products form a liquid waste stream or semi-solid sludge. The primary advantage of dry systems is the lowered disposal costs of the dry product.

Wet Flue Gas Desulfurization

Wet FGD processes use an alkaline solution or slurry to absorb SO_2 from the combustion unit flue gas. Typically, chemical solutions such as sodium, dual alkali, limestone, or lime are used. In the wet process, the absorbed SO_2 exits the system either as a liquid waste stream or as a semi-solid waste sludge. The waste stream is usually dewatered before disposal, but still contains a significant amount of water.

Sodium alkali scrubbers represent a common type of wet FGD process. These scrubbers use an aqueous solution of sodium hydroxide (NaOH), sodium carbonate (Na_2CO_3), sodium bicarbonate ($NaHCO_3$), or a mixture of these to absorb SO_2. The effectiveness of sodium alkali scrubbers at reducing SO_2 is very good, and with coal, SO_2 reductions of 95 to 98 percent can be achieved. When combusting oil, a lower SO_2 reduction occurs, typically 90 to 95 percent (USEPA, 1984).

Dual alkali systems use a clear sodium alkali solution to absorb SO_2, followed by a step involving lime or limestone to regenerate the active alkali for SO_2. The sulfur is removed as a calcium sulfate, sulfate precipitate (sludge). These systems can achieve SO_2 reductions of 90 to 95 percent for coal-fired systems (USEPA, 1984).

Lime/limestone processes use wet scrubbers using a slaked lime slurry ($Ca(OH)_2$) or limestone ($CaCO_3$) to absorb SO_2 emissions from the flue gas. Typical SO_2 reduction efficiencies for lime/limestone systems range from 85 to 95 percent.

Dry Flue Gas Desulfurization

Dry FGD processes use an alkaline solution or slurry to absorb SO_2 from the flue gas, where the waste is a dry solid. The most common dry FGD processes are spray drying and dry injection.

The spray dryer FGD process involves contacting the flue gas with an atomized lime slurry or a solution of sodium carbonate by dispersing the slurry into a large chamber. The flue gas "dries" the slurry, which absorbs SO_2 into the cavities of the drying particle. The dry particulate is then collected by various methods, in the same manner as other dry particulates. These spray dryer systems generally achieve an average SO_2 emission reduction of 70 percent (USEPA, 1984).

Dry injection FGD processes involve in-duct injection of a dry alkali into the flue gas before the particulate control device. The alkali compound, which can be hydrated lime ($Ca(OH)_2$), calcined lime (CaO), or sodium reagent, reacts with SO_2 and forms a solid, which is removed by the particulate matter control device. In-duct humidification is sometimes used to enhance capture efficiency for calcium-based sorbents. Although a number of full-scale and pilot-scale demonstration projects have researched the application of dry injection in other coal-firing boilers, the capture efficiency is an average of 40-60% for SO_2.

4.2.2.1 Turbines, Duct Burners, Boiler, and Heaters

The following sulfur dioxide control technologies are available for the facility's turbines, duct burners, boilers, and heaters: use of natural gas, low sulfur fuel, and flue gas desulfurization. The facility's turbines operate primarily on natural gas. In the event of a natural gas supply interruption, two turbines (including the HRSG unit) run on distillate fuel. In order to control sulfur emissions from the turbines, the Department evaluated use of natural gas, low sulfur fuel, natural gas desulfurization, and flue gas desulfurization.

Natural Gas Desulfurization/Use of Natural Gas

The use of natural gas as a primary fuel for the turbines, duct burner, boiler, and heaters is a means of controlling sulfur emissions. The applicant proposes the use of natural gas that contains trace amounts of sulfur (less than 4 ppm H_2S). Desulfurization will occur at the North Slope gas conditioning facility. Switching fuel from oil to natural gas will reduce sulfur dioxide emissions.

Low Sulfur Fuel Specification

This technology is available for turbines, engines, heaters, boilers, flares, and duct burner. Low sulfur fuel is defined as fuel containing 0.5% sulfur content by weight.

The EPA Clearinghouse lists low sulfur fuel applicant has evaluated two low sulfur fuels 0.05% by weight and 0.3% by weight. The Department will not further evaluate the use of 0.05% sulfur content distillate fuel since this fuel costs $0.25 per gallon higher than current fuel oil prices (YPC, 1996). The Department considered 0.05% by weight sulfur content fuel as not economically feasible based on applicant provided cost analysis, $10,200 and $13,200 per ton SO_2 removed for LHV and HHV fuel respectively (YPC, 1996b).

The facility proposes to use natural gas containing less than 4 ppm H_2S as a primary fuel for the turbines, duct burners, and heaters. In the event of insufficient natural gas supply, the facility proposes to use low sulfur fuel with a sulfur content not greater than 0.3% by weight.

This technology is available, technically feasible, and BACT for this facility's natural gas-fired turbines, duct burner, boiler, and heaters.

Fuel Gas Desulfurization (FGD)

This technology is considered available for the boilers, heaters, and incinerators. FGD is the chemical treatment of the exhaust gas to remove sulfur oxides. FGD technologies include wet/dry scrubbers and sorbent injection. The turbines, duct burner, heaters, and boiler operate

primarily on natural gas. The units operate on distillate fuel as an emergency backup. The emissions of this equipment are negligible on natural gas.

The Department determines that this technology is technically feasible, but is cost-prohibitive due to the insignificant emission reduction and high costs applying the technology.

4.2.2.2 Incinerator

The following sulfur dioxide control technologies are available for the facility's waste incinerator: low sulfur wastes and flue gas desulfurization. The incinerator combusts waste generated at the facility including biological waste from the facility water treatment system.

Using AP-42 emission factors, the applicant calculated the incinerator's annual sulfur dioxide emissions at 10 tons per year. These emissions are negligible and make the incremental cost of added flue gas desulfurization system per ton of sulfur dioxide removed extremely high. The Department determines that although flue gas desulfurization is available and technically feasible, it is not economically feasible for the facility's incinerator.

The sulfur content of the wastes combusted by the incinerator is unknown because the waste characteristics change constantly. Analysis of the waste steam could determine the sulfur content on an instantaneous basis, but this information would be meaningless since the waste stream constantly changes. Also, this testing is cumbersome and costly for this insignificant source of sulfur dioxide. The Department determines low-sulfur waste restrictions are not economically or technically feasible for the facility's incinerator.

The Facility determines no SO_2 controls as BACT for the facility's incinerator.

4.2.2.3 Diesel-fired Internal Combustion Engines

The available control technologies for diesel engines are low sulfur fuel and flue gas desulfurization. The Department considers flue gas desulfurization not technically feasible due to the size and the circumstances in which these engines operate. As discussed previously in Section 4.1.2.4, the facility's engines are operated during emergencies and for periodic testing and maintenance only. The permit shall limit the applicant's operation of these engines to only during emergencies or maintenance activities.

The Department determines low sulfur fuel of 0.5% sulfur by weight is available, technically feasible, and BACT for the facility's diesel engines.

4.2.2.4 Flares

The control technologies available for flares are low sulfur fuel and flue gas desulfurization. The Department considers flue gas desulfurization not technically feasible due to the size and the circumstances in which these flares operate. As discussed previously in Section 4.1.2.5, the facility's flares allow safe operation, shutdown and start-up of the facility.

The flares combust waste gases from the facility. The gas at this facility contains less than 4 ppm hydrogen sulfide. The Department determines natural gas pilot fuel is available and technically feasible, and is BACT for sulfur dioxide emissions from the flaring system.

4.3 CONTROL TECHNOLOGY FOR CARBON MONOXIDE (CO)

The operation of this proposed facility results in the potential emission of carbon monoxide of approximately 1,999 tons per year which exceeds the PSD applicability threshold of 100 tons per year specified in 18 AAC 50.300(h)(3)(B)(i). Therefore, CO BACT is required for this facility. The applicant has proposed to use proper operation and design as the CO BACT for the turbines and heaters. Table 4-3 contains the list of applicant-proposed BACT.

Table 4-3 Applicant Proposed BACT for CO

Source Nos.	Description	Control Technology	Emission Limit
1-4; 8-11; 15-18; 22-25;	Natural gas-fired turbines GE turbines	Operate per Design	15 ppmv (15% O_2)
5, 12, 19, 26, 33, 34, 35	Natural gas-fired turbines EGT Typhoon	Operate per Design	25 ppmv (15% O_2)
40-44	Natural gas-fired turbines Caterpillar Solar	Operate per Design	50 ppmv (15% O_2)
38a	Dual-fired turbines	Operate per Design	50 ppmv (15% O_2)
39	Dual-fired turbines	Operate per Design	50 ppmv (15% O_2)
38b	Dual-fired duct burner	Operate per Design	n/a
36	Gas/diesel fired boiler	Operate per Design	n/a
6,13,20,27	Gas-fired heaters	Operate per Design	35 lb/mmcf
7,14,21,28-30	Flares	Operate per Design	0.02-0.4 lb/MMBtu
37	Incinerator	Operate per Design	n/a
31,32	Gas/diesel tanker boilers	Operate per Design	n/a
45-48	Diesel-fired internal combustion engines	Operate per Design	n/a

4.3.1 Mechanisms of CO Formation

The formation of CO during combustion of fossil fuels is the result of fuel-rich non-stoichiometric combustion, also known as incomplete combustion. Stoichiometric combustion occurs under ideal conditions of time, temperature, and fuel/air mixing. At stoichiometric conditions, the exact quantity of air is present to provide for complete combustion of the fuel. In practice, to ensure adequate air is available for complete combustion, excess air is provided for combustion. Although, too much excess air may also be uneconomical (the heat of combustion also heats up the excess air, which lowers the amount of heat available for the recovery). It is a common practice to provide twice the air needed for stoichiometric combustion. This method of CO control, which involves maintenance practices and proper operation of the equipment, is the most widely applied. Another method of CO control is the use of catalytic oxidation.

4.3.2 Available Control Technology for Carbon Monoxide

Good combustion minimizes the production of CO, VOC, and particulate. Most NO_X control technologies interfere with complete combustion; therefore they increases CO emissions. BACT for NO_X has been determined in Section 4.1. From the Anderson Bay facility, NO_X is the pollutant of greater concern due to ambient impacts and emissions.

4.3.2.1 Turbines

The following technologies control carbon monoxide in turbines: Selective Catalytic Oxidation (SCO); Non-selective Catalytic Reduction; avoid incomplete combustion; and operational controls.

Avoid Incomplete Combustion

Dry Low NO_X controls, selected as BACT for NO_X emissions in Section 4.1.4.1, lowers combustion temperature from ideal levels and increases CO and hydrocarbon emissions. As NO_X is the pollutant of greater concern, this control technology for CO will not be evaluated further.

Selective Catalytic Oxidation (SCO)

Selective catalytic oxidation (SCO) for carbon monoxide (CO) control is capable of achieving greater than 85 percent CO reduction, but vendors provide a guarantee of only 80 percent CO reduction. SCO provides pollutant removal by oxidation of carbon monoxide from the exhaust of the combustor section. SCO can also be used in conjunction with NSCR to provide for combined NO_x/CO emissions control.

The catalytic oxidation system decreases CO in the flue gas by oxidizing CO into carbon dioxide (CO_2) in the presence of a noble metal catalyst. This system does not have the drawbacks of the SCR system for NO_x control in that it does not require handling, storage, and injection of reagents such as ammonia. Also, the upper temperature ceiling of the catalyst is 1250° F.

In catalytic oxidation of CO, the reaction proceeds as follows:

$$2\ CO + O_2 \longleftrightarrow 2\ CO_2$$

The underlying principle of this catalytic process is the use of active catalyst sites on which the reactant species are adsorbed. This adsorption process allows combination of the reactant species at much lower gas temperatures than required for the uncatalyzed oxidation. Among the materials under consideration for oxidation applications of this type, platinum-group metals are the most active and durable.

The CO catalyst is most effective at the temperatures greater than 600° F. At temperatures below 600° F or so, the catalyst becomes inactive and essentially no CO-to-CO_2 conversion can occur. For effective volatile organic compound (VOC) oxidation, higher temperatures, around 700° F to 800° F, are required.

The CO catalyst has a disadvantage when applied to sulfur bearing fuels in that some of the inlet SO_2 will be oxidized to SO_3. This could lead to corrosion problems and shortened equipment life when used in conjunction with higher sulfur fuels, for this technology is most applicable to natural gas fired units. There is little experience with applying this technology to units burning greater than 0.2% sulfur content fuel. This technology is considered available and technically feasible for natural gas turbines, but has problems with catalyst poisoning and masking with fuel oils.

Non-Selective Catalytic Reduction

NSCR is used in conjunction with SCO. For a detailed discussion on NSCR, see Section 4.1.2.1. Due to the high exhaust temperature of the turbine (15% oxygen) and no heat recovery system to ensure stable catalyst temperature, NSCR is not technically feasible for the facility's turbines and will not be further evaluated.

Operational Controls

Operating per design essentially maximizes the efficiency of the combustion process, thereby completely oxidizing the carbon in the fuel to CO_2 instead of carbon monoxide. Incomplete combustion is the primary cause of CO emissions from stationary sources. CO emissions are best reduced by regulating fuel-to-air ratios, fuel/air mixing, and the control of inlet air temperatures and combustion temperatures to maintain proper combustion conditions. Operational controls will result in no reduction in CO emissions since it is currently practiced and counted as the baseline emissions. This technology is available and technically feasible.

4.3.2.2 Incinerator

The following technologies control carbon monoxide in turbines: Selective Catalytic Oxidation (SCO); Non-selective Catalytic Reduction; Secondary combustion chamber; and combustion management.

Combustion Management

No other control technology except for good combustion management is listed in EPA's Clearinghouse. Good Combustion Management is also known as operational controls. Combustion as described in Section 4.3.2.1 will minimize CO emissions from the facility's incinerator. This control is available and technically feasible.

Secondary chamber

A secondary chamber in a furnace promotes optimum combustion, which minimizes CO formation. The design of this unit produces relatively low CO emissions. According to AP-42, the emission factor is 2.1 pounds of CO per ton of biological sludge material feed, and 1.92 pounds of CO per ton of non-sludge solids. The facility's fluidized bed design includes a freeboard section which acts as a secondary chamber to ensure complete combustion occurs (YPC, 1996). This technology is available and technically feasible.

Selective Catalytic Oxidation (SCO)

Selective catalytic oxidation (SCO) for carbon monoxide (CO) control is capable of achieving greater than 85 percent CO reduction, but vendors provide a guarantee of only 80 percent CO reduction. SCO provides pollutant removal by oxidation of carbon monoxide from the exhaust of the combustor section. SCO can also be used in conjunction with NSCR to provide for combined NO_x/CO emissions control. For a more detailed discussion on the control technology, see Section 4.3.2.1.

Due to the high particulate loading from this source, SCO is considered not technically feasible and will not be evaluated further.

Non Selective Catalytic Reduction

NSCR is used in conjunction with SCO. For a detailed discussion on NSCR, see Section 4.1.2.1. Due to the high particulate loading from this source, SCO/NSCR is not considered technically feasible and will not be evaluated further.

4.3.2.3 Duct burner, Steam boiler and Heaters

The following technologies control carbon monoxide in boilers, duct burners, and heaters: Selective Catalytic Oxidation (SCO), Non-selective Catalytic Reduction, avoid incomplete combustion, and operational controls such as a operate at high excess air. The Department evaluation of BACT for the duct burner is included in the turbine Section 4.3.2.1. The heaters are designed to operate no more than two hours per day and the boiler is for emergency back-up only, so overall CO emissions should be relatively low at less than 6 tons per year (Appendix A).

Selective Catalytic Oxidation (SCO)

Selective catalytic oxidation (SCO) for carbon monoxide (CO) control is capable of achieving greater than 85 percent CO reduction, but vendors provide a guarantee of only 80 percent CO reduction. SCO provides pollutant removal by oxidation of carbon monoxide from the exhaust of the combustor section. SCO can also be used in conjunction with NSCR to provide for

combined NO_x/CO emissions control. The design of the boiler and short operating of the heaters produce relatively low CO emissions of less than 6 tons per year, therefore the Department determines this technology is not economically feasible. No economic analysis is required.

The Department evaluated SCO for the duct burner in the turbine Section 4.3.2.1.

Non Selective Catalytic Reduction

NSCR is used in conjunction with SCO. For a detailed discussion on NSCR, see Section 4.1.2.1. The design of these units produce relatively low CO emissions of less than 7 tons per year, therefore the Department determines this technology is not economically feasible. No economic analysis is required.

Avoid Incomplete Combustion

Low NO_X burner selected as BACT for NO_X emissions in Section 4.3.3.1 lowers combustion temperature resulting in incomplete combustion which increases CO and hydrocarbon emissions. NO_X is a pollutant of greater quantity from the facility and leads to ozone formation, therefore this control technology for CO will not be evaluated further.

Good Combustion Management/Operation at High Excess Air

Good Combustion Management essentially maximizes the efficiency of the combustion process, thereby completely oxidizing the carbon in the fuel to CO_2 instead of carbon monoxide. Incomplete combustion is the primary cause of CO emissions from stationary sources. CO emissions are best reduced by regulating fuel-to-air ratios, fuel/air mixing, and the control of inlet air temperatures and combustion temperatures to maintain proper combustion conditions. Operation per design will result in no reduction in CO emissions since it is currently practiced and counted in the baseline emissions. This technology is available and technically feasible.

Operation at high excess air ensures that sufficient oxygen is available to complete combustion. This technology is not considered feasible because the equipment at the facility operates at low excess air to control NO_X emissions, as these emissions are of greater concern. The Department will not evaluate technology further.

4.3.2.4 Diesel-fired Internal Combustion Engines

As described in Section 4.1.2.4, three engines power fire pumps and one 250 hp engine that operates an air compressor. The following carbon monoxide control technologies are: Selective Catalytic Oxidation (SCO); Non-selective Catalytic Reduction; avoid incomplete combustion; and Good Combustion Practices.

Selective Catalytic Oxidation (SCO)

Selective catalytic oxidation (SCO) for carbon monoxide (CO) control is capable of achieving greater than 85 percent CO reduction, but vendors provide a guarantee of only 80 percent CO reduction. SCO provides pollutant removal by oxidation of carbon monoxide from the engine exhaust. SCO can also be used in conjunction with NSCR to provide for combined NO_x/CO emissions control. Due to limited operation, these engines produce relatively low CO emissions, therefore the Department determines this technology is not economically feasible. No economic analysis was required. Appendix A calculates emissions inventory as if these units operate 8,760 hours per year to conservatively model ambient air impact. These hours are greater than the applicant's operating plans.

Non Selective Catalytic Reduction

NSCR is used in conjunction with SCO. For a detailed discussion on NSCR, see Section 4.1.2.1. The limited operating hours of these units produce low CO emissions. Therefore, the Department determines NSCR is not economically feasible. No economic analysis is required.

Avoid NO_X Controls

There are no controls except for operate per design at low excess air selected as BACT NO_X emissions for the facility's engines. The Department determines this method is not available for the facility's engines.

Good Combustion Practices

Operating per design essentially maximizes the efficiency of the combustion process, thereby completely oxidizing the carbon in the fuel to CO_2 instead of carbon monoxide. Incomplete combustion is the primary cause of CO emissions from stationary sources. CO emissions are best reduced by regulating fuel-to-air ratios, fuel/air mixing, and the control of inlet air temperatures and combustion temperatures to maintain proper combustion conditions. Good combustion practices will result in no reduction in CO emissions since it is currently practiced and counted in the baseline emissions. This technology is available and technically feasible.

4.3.2.5 Flares

Good combustion practices are the only CO control technology for flares. Operate the flare in accordance with manufacturer's recommended practices. The flares' smokeless design incorporates features to promote complete combustion and reduce CO emission. The Department finds good combustion practices as BACT for CO for the facility's flare.

4.3.3 Impacts of Technically Feasible Control Technologies for CO

The Department has determined that good combustion practices is the only available, and technically and economically feasible control technology for the facility's turbines, engines, heaters, boiler, and flares.

The Department has determined good combustion practices, design features, and SCO are available and technically feasible CO control technologies for the facility's turbines. These technologies related to the turbines are discussed in Section 4.3.3.1.

4.3.3.1 Turbines

The cost impacts associated with applying Catalytic Oxidation to facility's natural gas fired turbines at the applicant's engines range from $12,700-$41,300 per ton CO removed. It is estimated that the CO removal efficiency will be 90% and the VOC reductions will be 50%. This technology will cause a 4% increase in fuel consumption, which will increase the PM_{10}, SO_2, and NO_X emissions in these engines. The applicant included the cost analysis in their application, which is included in Appendix C. Therefore, the Department does not consider this technology cost-effective.

The Department considers good operating practices as BACT for CO for the facility turbines, and has accepted the CO limit of 15, 25 or 50 ppmv depending on the turbine manufacturer.

4.3.4 Final BACT Determination for CO

The Department has determined that Good Combustion Practices offset by NO_X controls is BACT for CO, for the facility's turbines, incinerator, boiler, heaters, diesel engines, and flares.

4.4 CONTROL TECHNOLOGY FOR PARTICULATE MATTER (PM_{10})

The operation of the facility will result in allowable particulate matter (PM_{10}) emissions up to 452 tons per year. This exceeds the 15 ton-per-year threshold for PSD applicability specified in 18 AAC 50.300(h)(3)(B)(v). Therefore, PM_{10} BACT is required for this facility. The applicant proposes to use proper operation and design as BACT for the turbines, boilers, heaters, and engines, and 0.5 lb/hr for the incinerator controlled by a venturi and tray scrubber (YPC, 1996).

4.4.1 Mechanisms of PM_{10} Formation

Particulate emissions are divided into two types, and originate from different sources. Point source particulate emissions are emissions from the exhaust gas stacks. Emissions from these sources are typically particulate matter of 10 micrometers or less in size (PM-10). Area source emissions from utility roads, cleared land, and aggregate piles are fugitive dust emissions, where the particulate matter is typically of 30 micrometers or less in size, called Total Suspended Particulate (TSP). The Department has replaced the annual and 24-hour TSP ambient standards and increments with a PM_{10} standard to target particulate matter.

The majority of PM-10 emissions from this facility are products of incomplete combustion, essentially incompletely combusted carbon compounds. Operating the equipment by design with good combustion management will reduce PM_{10} emissions.

Particulate matter is also subject to the requirements of visible emission limitations as discussed in Section 3.2 of this document.

4.4.2 Available Control Technology for PM_{10}

The facility uses natural gas as a primary fuel, which has negligible PM_{10} emissions. There are three state-of-the-art technologies that are available that have proven effective to remove PM_{10} and meet emissions standards listed in 18 AAC 50.055(b)(1). Fabric filter collectors, electrostatic precipitators, and wet scrubbers easily meet 0.05 grain/dscf emission levels. These technologies are sometimes installed in series with a mechanical collection system to further improve collection efficiency and to capture and reinject combustible ash. These technologies are available for the facility's turbines, heaters, boiler, duct burners, and incinerator. These technologies are not applicable to the facility's flares.

Fabric Filter Collectors

Fabric Filters, also known as baghouses, operate in the same fashion as a vacuum cleaner and should achieve collection efficiency of better than 95%. Flue gas is drawn through the fabric filter where particle collection occurs through interception, diffusion, gravitational, and electrostatic mechanisms. Particles build up on the filters until gas cannot pass through easily. When the gas cannot easily pass, it is necessary to clean the filters removing the particle "cake" via mechanical shaking, reverse air cleaning, or pulse jet cleaning. The products of cleaning are collected in hoppers and must be disposed of. Humid gas streams negatively affects fabric filter, causing excessive pressure drops across the bags, bag binding, and failures.

The various types of fabric filter collectors are distinguished by the cleaning method employed. These include reverse gas, reverse gas with sonic cleaning, shaker, and pulse jet collectors. The collectors can be cleaned "off line" by isolating individual compartments from the gas stream for cleaning, or "on line" without isolating the compartments.

Pulse jet type use cylindrical bags of fabric attached to a plenum plate located at the top of the bag to segregate the "clean" and "dirty" sides of the collector. Support cages are suspended inside the bags on the "clean" side of the gas plenum so that the gas pressure does not collapse them. The gas enters the lower portion of the collector above the hopper, and passes through the filter bags to the clean plenum, from which it exhausts to the stack. The particulate is retained on the surface of the bag. The fabric filter collector is divided into modules, and modules are periodically isolated from the gas stream. Then, a burst of high-pressure clean air is pulsed into the top of the bags to dislodge the collected particulate, which drops into the ash hopper.

Other types of fabric filter collectors have several compartments containing groups of long cylindrical bags, which can be up to 30 feet long, and are typically 8 to 12 inches in diameter. These bags are also connected at the bottom to the plenum plate, however the outside of the bags can be either the "clean" side or the "dirty" side, depending on the design. These collectors do not use support cages for the bags. Instead, the bags are clamped at the bottom to the plenum plate, and a cap at the top of the bag is typically attached to a spring mechanism to maintain tension. The bags are arranged in a grid pattern for maximum use of space. The bags are cleaned with the compartments usually cleaned "off-line" by isolating the compartment from the effluent stream.

Reverse gas cleaning is accomplished by using a set of poppets to control the flow of clean air in the reverse direction through the collector. Ash then drops into a collection hopper, where it is removed. Sonic assisted cleaning is done during the reverse gas flow, when a speaker emits a 110-decibel sound, which dislodges even more material from the bags. Shaker cleaning is done either with or without reverse air. In shaker cleaning, the bags are lowered slightly and shaken vigorously by a mechanical device. Various bag fabrics are available for use in different

temperature regimes, and coatings such as powdered Teflon may be applied to the surface. Fabric filters have proven to be effective in controlling the particulate.

Electrostatic Precipitators

The Electrostatic Precipitator (ESP) is a flue gas treatment control that typically can reduce particulate matter emission by 95%. An ESP consists of a large number of charged electrodes (wires) and collection plates arranged in parallel rows along the direction of gas flow. The collection plates are normally grounded, along with the hoppers and shell of the Precipitator. The discharge electrodes are energized to negative voltages ranging from 15,000 to 50,000 volts DC. A transformer-rectifier set typically converts 480-volt 3-phase alternating current to direct current at high voltages. The transformer-rectifier sets are mounted on the roof of the Precipitator and energize an independent portion of the Electrostatic Precipitator called a field. Normally there are 2 to 5 fields in a series along the flue gas flow path. Each field removes 50 to 85% of the particulate matter, depending on the resistivity of the particulate collected.

The ESP operates by passing flue gas between plates and electrodes, which maintain a high electric potential, thus charging particles in the gas stream and attracting them to ground on the collection plates. Plates and wires are cleaned by "rapping" them mechanically, dislodging the particulate, which then drops into the hopper.

Electrostatic precipitators are demonstrated technology for particulate matter control for the following operational ranges: Temperatures up to 1,700 degrees Fahrenheit, grain loading concentrations of 0.01 to 45 grains per dry standard cubic feet, with collection efficiency ranging from 85 to 99.9 percent.

Wet Scrubbers

Wet scrubbers use water or another aqueous solution to filter flue gas particles through interception, diffusion, gravitational, and electrostatic mechanisms. Collection efficiency of 95% or more may be achieved on particulate sized 0.1 to 20 microns. Spray chambers, cyclone scrubbers, and venturi scrubbers are typical designs available. The advantage of wet scrubbers is low capital cost as compared to other flue gas treatment systems. Wet sludge handling is the main disadvantage of this control technology.

4.4.2.1 Turbines, Duct Burners, Boiler and Heaters

The majority of particulate of PM-10 emissions from this facility are products of incomplete combustion, essentially incompletely combusted carbon, and carbon compounds, operating the equipment by design with good combustion management. Gas-fired and liquid-fuel-fired sources operated properly generate only very low inlet concentration of particulate emissions.

The Department determines combustion management to ensure complete combustion as BACT for the facility's turbines, heaters, engines, and boiler. The NSPS Subpart Db applies to the dual-fired boiler. The Subpart Db particulate limit for the boiler is 0.10 lb/MMBtu. The NSPS Subpart Dc applies to the duct burner installed on the dual-fired turbine is 20% opacity on a six-minute average, except for periods of startup, shutdown, and malfunction. The Subpart Db particulate limit for the boiler is 0.10 lbs/MMBtu of particulate.

4.4.2.2 Incinerator

The following particulate control technologies are available for the facility's waste incinerator: ESP, fabric filter, and wet scrubbers. The facility's incinerator design incorporates a venturi scrubber with control efficiency greater than 99.5%. Other controls listed would provide equivalent control. The Department accepts the venturi scrubber as BACT for the facility incinerator. The Department proposes an emission limit is 0.5 lb/hr, or 1.04 pound per ton of feed material.

4.4.2.3 Flares

The only control technology available for flares is complete combustion. Complete combustion is aided by the flares' smokeless design. The Department determines combustion management with smokeless flare design as BACT.

4.4.3 Final BACT Determination for Particulate Matter

The Department concurs that combustion management constitutes BACT for boilers, heaters, engines, and marine boilers. The Department limits all equipment not to exceed twenty-percent opacity standard for more than 3 minutes in any one-hour. The Department concurs that a venturi scrubber is BACT for the facility incinerator.

4.5 CONTROL TECHNOLOGY FOR VOLATILE ORGANIC COMPOUNDS

The operation of the facility will result in the allowable emission of volatile organic compounds (VOCs) of approximately 411 tons per year, which exceeds the 40 ton per year threshold for PSD applicability specified in 18 AAC 50.300(h)(3)(B)(vi). Therefore, VOC BACT is required for this facility. VOCs add to the formation of ozone (O_3) in the atmosphere. The applicant proposes to use proper operation and design as BACT for the turbines, boilers, heaters, engines, and incinerator. Flare operation and NSPS Subpart KKK leak detection is BACT for fugitive VOC emissions.

4.5.1 Mechanisms of Volatile Organic Compound (VOC) Formation

As with carbon monoxide, the formation of VOCs in the combustion of fossil fuels is the result of fuel-rich non-stoichiometric combustion, also known as incomplete combustion. Stoichiometric combustion occurs when only the exact quantity of air is present to provide for complete combustion of the fuel. In practice, since complete combustion of the fuel is desired for economy, some excess air is provided for combustion in internal combustion engines, turbines, heaters, and boiler.

4.5.2 Available Control Technology for Volatile Organic Compounds (VOC)

Combustion management essentially maximizes the efficiency of the combustion process, thereby completely oxidizing the carbon in the fuel to CO_2 instead of carbon monoxide or volatile organic compounds (VOC). Incomplete combustion is the primary cause of VOC emissions from stationary sources. VOC emissions are best reduced by regulating fuel-to-air ratios, fuel/air mixing, and the control of inlet air temperatures and combustion temperatures to maintain proper combustion conditions. This technology is technically feasible for the facility's incinerator.

Selective Catalytic Oxidation (SCO) and Non-selective Catalytic Reduction (NSCR) can reduce VOC emissions in the facility's turbines, duct burner, boiler, heaters, LNG tanker boilers, and engines. Please see Section 4.3.2 for detailed technology descriptions.

4.5.2.1 Turbines, Duct Burners, Boiler, Heaters, LNG Tanker Boilers and Engines

Catalytic Oxidation (SCO), NSCR, Combustion Management Selective can reduce VOC emissions in the facility's turbines, duct burner, boiler, heaters, LNG tanker boilers, and engines. Please see Section 4.3.2 for detailed technology descriptions. Estimated VOC emissions from this equipment are estimated from less than 0.1 tons per year to approximately 4 tons per year from the largest turbine. These are relatively small emissions, making the cost per tons of VOC removed prohibitively expensive. The cost-effectiveness of this technology ranges from $225,000 to $1,100,00 per ton of VOC removed. NSCR and SCO will not be evaluated further based on costs. The Department concurs that operation per design is BACT for the facility's turbines, duct burner, boiler, heaters, and engines.

4.5.2.2 Incinerators

Combustion management, design configuration using a secondary chamber, Selective Catalytic Oxidation (SCO), and NSCR can reduce VOC emissions in the facility's incinerator. Estimated VOC emissions from this equipment are estimated at 7 tons per year using the AP-42 emission factor. These are relatively small emissions, making the cost per ton of VOC removed expensive. NSCR and SCO will not be evaluated further based on costs. The Department

concurs that combustion management with design configuration including secondary chamber is BACT for the facility's incinerator.

4.5.2.3 Flare and Fugitive Emissions

The only control option for the flare is combustion management and smokeless design. The Department concurs that this technology is BACT for the facility's flare.

The facility is mandated under NSPS Subpart KKK to control fugitive VOC emissions. The largest potential of these fugitive emissions are compressor seals and pressure relief valves (YPC, 1996). The applicant will minimize VOC emissions from all other sources using the NSPS required leak detection program and repair system. The Department considers combustion management and smokeless design BACT. For control of fugitive emissions, the Department considers NSPS Subpart KKK leak detection and repair as BACT.

4.5.3 Final BACT Determination for VOC

The Department concurs that combustion management is BACT for all equipment at the facility. For the incinerator and flare design considerations for secondary combustion and smokeless flare, respectively, are considered BACT. BACT for fugitive emissions is by flare and leak detection and repair as required by NSPS Subpart KKK.

5.0 AMBIENT AIR QUALITY IMPACT ANALYSIS

5.1 INTRODUCTION

The Department's goal for the ambient air quality review is to determine whether the proposed facility emissions will cause or contribute to a violation of an ambient air quality standard established in 18 AAC 50.010, or the PSD air quality increments established in 18 AAC 50.020(b)(2). The air quality standards were set by the U.S. Environmental Protection Agency (EPA) and the Department to protect human health and welfare. EPA established the increments to prevent significant deterioration of air quality in areas that meet ambient air quality standards.

YPC has conducted an ambient air impact analysis for the construction and operational phases of this project, evaluating potential worst-case impacts for the regulated pollutants of carbon monoxide (CO), Nitrogen Dioxide (NO_2), Sulfur Dioxide (SO_2), and small Particulate Matter (PM_{10}), in accordance with 18 AAC 50.315(e)(3)(B).

In this section, the Department outlines the planning tools used to review ambient impacts associated with the project, the project analysis, and results. In addition, the Department assesses the need for ambient air contaminant monitoring after the project is constructed.

5.1.1 National Ambient Air Quality Standards

Ambient air is air external to buildings to which the public has access. Ambient air does not include indoor air and does not include air within the fence-line of an industrial complex, facility, or work place. The EPA has developed National Ambient Air Quality Standards (NAAQS) to protect public health and welfare for the following air contaminants: sulfur dioxide, ozone, particulate matter, nitrogen dioxide, carbon monoxide, and lead, as listed in Table 5.4-2. The Department has adopted the NAAQS in the Air Quality Control Regulations listed in 18 AAC 50.010. The Department has also established welfare-based ambient standards for ammonia and reduced sulfur compounds.

Air quality at the work place is regulated through standards developed for worker safety and health, and enforced by the Department of Labor and the Federal Occupational Health and Safety Administration (OSHA). EPA regulates indoor air through programs not delegated to the Department.

5.1.2 PSD Increments

In 1977, Congress established a classification system to control new air contaminant emission sources. Congress mandated that the EPA protect air quality in areas with good air quality by establishing the maximum level to which air contaminant concentrations could increase in

ambient air. Increments are developed by EPA to allow some industrial growth, while limiting deterioration of air quality. EPA has promulgated increments for nitrogen dioxide (NO_2), sulfur dioxide (SO_2), and particulate matter (PM_{10}). There are no PSD increments for carbon monoxide.

The Prevention of Significant Deterioration Program (PSD) sets baseline dates from which to measure growth. The baseline date is set for a given air contaminant in a given region when the Department receives a complete Air Quality Permit application for a project subject to pre-construction review under PSD. Subsequent to the baseline date, all increases in ambient air concentration must remain below the increment.

For the purposes of PSD, Alaska is divided into four Intrastate Ambient Air Quality Regions: No. 008--Cook Inlet Intrastate Region, No. 009--Northern Intrastate Region, No. 010--Southcentral Alaska Intrastate Region, and No. 011--Southeastern Alaska Intrastate Region. The applicant's facility is located in the Southcentral Alaska Intrastate Region. Baseline dates have been set in the Southcentral Alaska Region for all three pollutants with ambient increments: sulfur dioxide, nitrogen dioxide, and particulate matter.

Congress also established three classes of areas in attainment with the NAAQS: Class I, typically for National Parks and National Wildlife Refuges, which allows new emissions to only use up about ten percent of the NAAQS and nearly precludes any industrial growth; Class III, for industrial areas which allows growth to use up to 50% of the NAAQS; and all other areas are Class II, which allows moderate growth, but assures that growth does not use up more than about 25% of the NAAQS.

Congress established four Class I areas in Alaska: that portion of Denali National Park and Preserve encompassing the boundaries of the former Mt. McKinley National Park, Tuxedni Wilderness Area, Bering Sea Wilderness Area, and Simeonof Wilderness Area. Not only are Class I areas subject to stringent increments, the areas' air resources are protected by Visibility and Integral Vista Provisions of the Clean Air Act, as discussed in Section 6.1.1.

The remainder of Alaska, including Valdez, is Classified as Class II, which allows moderate development. Alaska has no Class III areas.

5.1.3 Pre-construction Review

Whenever a new Major Facility or source of air emissions is proposed, the process for determining if the source would operate in compliance with the Federal Clean Air Act (1990) and State Air Quality Control Regulations fall within the term called New Source Review (NSR).

The Federal PSD regulations (40 CFR 52.21) require that any proposed facility with the potential to emit more than 250 tons per year (tpy) of any regulated pollutant, be classified as a major stationary source and be subject to PSD review.

Under the permitting procedures, new major facilities are evaluated by two criteria: location in an attainment area or Unclassified Area (areas designated as complying with the NAAQS) versus non-attainment areas (areas with air contaminant concentrations exceeding the NAAQS). For any source, compliance with the NAAQS and the State air standards, as listed in Table 5.4-2, is based on the sum of impacts from the existing sources, the proposed facility, and from the ambient background level. Attainment designations are pollutant-specific. For example, an area may be designated non-attainment for particulate matter (PM_{10}), and in attainment for NO_x and the other criteria pollutants. Valdez and the Anderson Bay area, in the South Central Alaska Intrastate AQCR, are unclassified or designated in attainment for all criteria pollutants.

5.1.4 Ambient Analysis Tools

An applicant for pre-construction review under PSD provisions may be required to include in their application meteorological data, pre-construction ambient air contaminant data, and a computerized dispersion modeling assessment. These three components of the application are used as ambient analysis tools to ensure the planned project complies with the NAAQS and PSD increments.

Computer dispersion simulation modeling is used as a planning tool to predict ambient air quality impacts. Ambient air contaminant concentrations are dependent on emission rates due to a given project or facility, emission stack parameters, weather conditions, and terrain, as well as background levels of contaminants. EPA has developed specific models to predict these impacts. The models require emission rates, plume flow rates and exit temperatures, stack height, building dimensions, and locations and elevations for the receptors that modelers wish to assess impacts. Models also use default "worst-case" meteorological parameters or actual meteorological data, depending on their level of sophistication.

The YPC ambient air impact analysis for operational project impacts used the Integrated Gaussian Model (IGM) (United Engineers 1993). YPC selected this model because of its flexibility in terms of the numbers of sources than can be simulated and the ability to use different combinations of EPA Guideline algorithms for flat and complex terrain receptor areas. The principal advantage of IGM for this application is its ability to evaluate air quality impacts of multiple groups of point sources by means of the dispersion algorithms of the Rough Terrain Dispersion Model (RTDM) for elevated receptor areas, as well as the Industrial Source Complex Short Term 2 model for flat terrain areas. In accordance with EPA policy for evaluating impacts at intermediate terrain receptors (above stack height, but below the height of final plume rise), IGM uses the higher of the RTDM and ISCST2 concentration predictions at these receptors for each hour of meteorological input data record. Impacts of project construction emissions were

evaluated by means of the ISCST3 model. These emissions were represented by a number of point sources and area sources. EPA granted the IGM an equivalence approval on January 21, 1993 (OAQPS-Russell F. Lee).

The applicant used the ambient assessment tools of modeling and pre-construction monitoring to demonstrate that its facility will *not* cause or contribute to a violation of NAAQS or increments. The following sections describe the pre-construction monitoring (meteorological and ambient pollutant concentrations), modeling analysis, and modeling results in further detail.

5.2 METEOROLOGICAL DATA

The Port of Valdez is a well-sheltered extension of Prince William Sound on the north coast of the Gulf of Alaska. The east-west orientation of the bay has a southern side of mountains that rise rather sharply to elevations above 2,000 feet, and isolated peaks above 4,000 feet.

The sheltering and channeling effects of terrain produce bimodal or two distinct wind regimes. In the winter, the prevailing wind directions are from the east. The high ridges to the north provide a barrier to the flow of cold continental air from the interior. Valdez has average daily minimum temperatures below 15° F in December through February. The coldest temperatures are typically during calm periods. In the summer, the prevailing winds are from the west. Precipitation is abundant in all seasons, but greatest on average in September and October. The Valdez area experiences one of the highest total snowfall in the state, with average yearly amounts of about 250 inches. Cloudy conditions (eight-tenths cloud cover or more) occur between 60 and 70 percent of the time.

Prior to granting YPC a PSD and air permit to construct, the State required YPC to submit a 12-month representative meteorological data set that would be used to assess potential air quality impacts from the new source. The monitoring station, referred to as the "Train Station" site, was installed in late 1994. On January 1, 1995, YPC commenced monitoring meteorological conditions at the Compressor Train Station site located near Anderson Bay on the South shore of Port Valdez, seven miles southwest of Valdez, Alaska (see Figure 5-2).

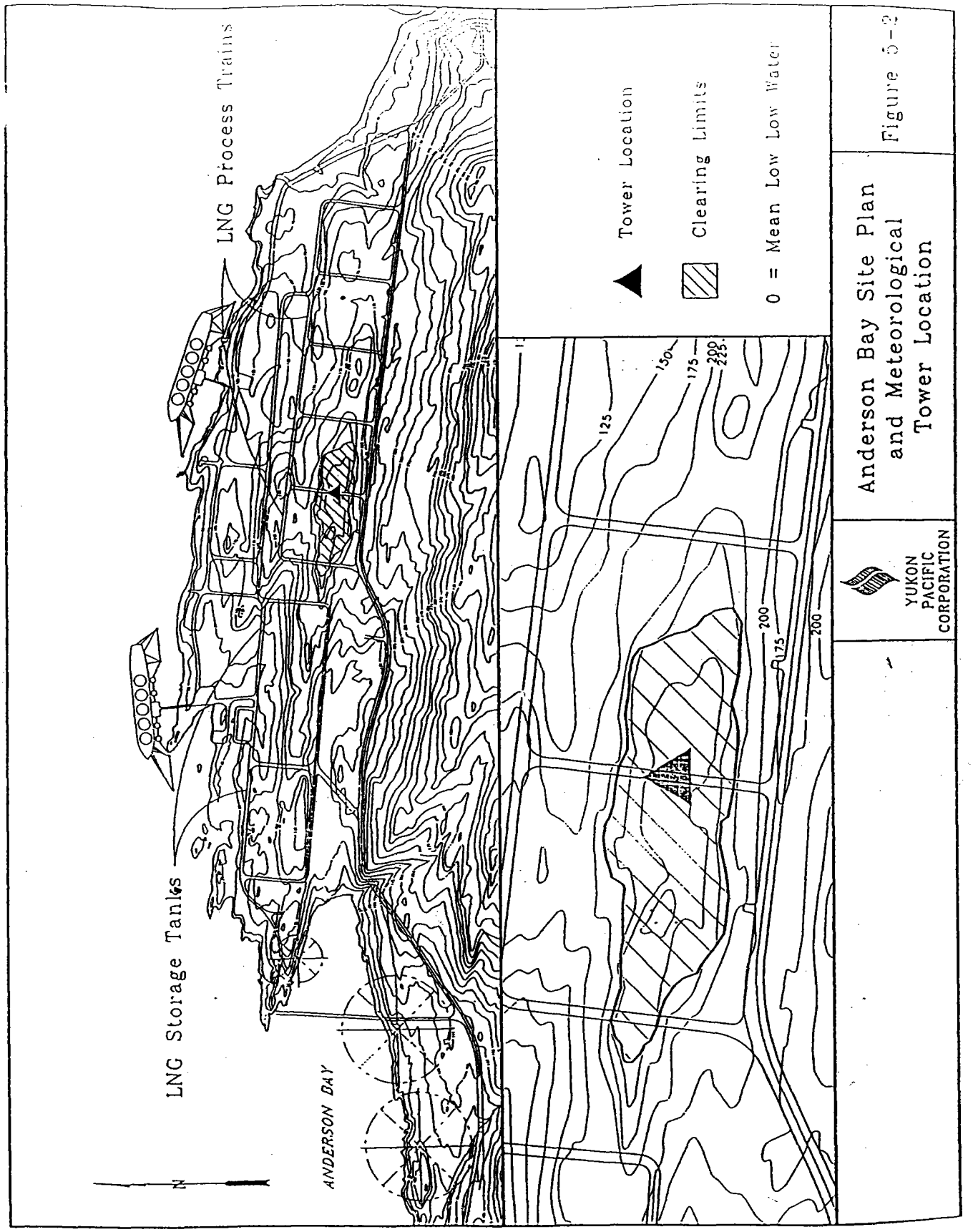
LNG Process Trains
LNG Storage Tanks
ANDERSON BAY
N
Tower Location
Clearing Limits
0 = Mean Low Water
125
150
175
200
225
200
125
200
YUKON PACIFIC CORPORATION
Anderson Bay Site Plan and Meteorological Tower Location
Figure 5-2

Data from a 10-meter meteorological monitoring tower were collected for several years at the Anderson Bay site and were used in the air quality analyses for the project Environmental Impact Statement, along with additional monitoring analyses based on hypothetical worst-case meteorology. YPC agreed with the Department and EPA Region 10 that data from a more representative monitoring location would be required to support the analyses associated with YPC's PSD application. Accordingly, YPC developed a monitoring plan with the approval of the Department and EPA to collect the required data. Both agencies participated in the siting of the tower at the location of the largest potential emissions sources at the Anderson Bay site and in the selection of heights for the different instrumentation. The resulting 40-meter monitoring tower was operated by YPC for more than one year, and the resulting data were submitted in quarterly data reports to the Department. Data for the one-year period from March 1, 1995, to February 29, 1996, were used in the air quality modeling analysis presented in YPC's application. The data from this tower included:

- wind speed, wind direction, and wind direction standard deviation (sigma theta) at the 12-meter and 39-meter levels (the 12-meter level was selected to obtain data normally collected at 10-meters as a means to compensate for the deep snow cover that characterizes the Anderson Bay area for a large fraction of the year);

- temperature at 8 meters and 39 meters, and vertical temperature difference between these levels;

Figure 5-3 and 5-4 show that the wind roses at the 12-meter and 39-meter levels for the one-year monitoring period.

The Department and EPA determined that no representative upper air data are available to characterize mixing heights at Anderson Bay. Accordingly, YPC adopted the very conservative approach for specifying mixing height. This approach is used by the EPA SCREEN model for applications if representative upper air data is unavailable. This procedure is implemented as follows: the mixing height for each hour of the meteorological input record is set to a value that is 1.0 meter above the calculated final plume rise of the most important YPC source being modeled. This source criteria (plume rise/emissions) changes with the pollutant of concern; for PM10, CO, and NO_x, the greatest emission sources are the refrigeration compressors; for SO_2 it is the two LNG tankers. If the calculated plume rise plus one meter is less than the quantity 320 x U10, (where U10 is the 12-meter wind speed), then the latter quantity is selected to represent the mixing height. This adjustment is necessary to prevent the use of unrealistically low mixing heights during periods of very strong winds, which reduce plume rise, but which are actually characterized by high mixing heights.

When modeling, the mixing height is used in the model calculations for those hours with unstable and neutral (Class A through D) stability classes. In the YPC analysis this assumed mixing height conservatively ensures that plume "break through" into the area above the mixing

height will not occur. The mixing height sets an expected barrier level where the source plume cannot pass through. This condition adds conservatism since the basic physical event is now defined to make the source emission plume reflect toward the ground level receptors, increasing potential modeled values. For the year of record for the YPC analysis, the mixing height was set equal to the height of final plume rise plus one meter--about eighty-three percent (83%) of the annual hours for the PM_{10}, CO, and NO_X model runs. The tanker exhaust has a lower temperature and exit velocity, therefore, the wind-speed-based approach was used in lieu of plume rise plus one meter, for 60% of the hours in the SO_2 model run.

The primary data used by the applicant for assigning the atmospheric stability class for each hour of the meteorological input data record were sigma theta values calculated as the standard deviation of wind direction variability at the 12-meter level of the on-site meteorological tower. The 39-meter site was used as the backup to substitute missing data. If both sites were invalid, the applicant proposed the EPA solar radiation-delta temperature (SRDT) method. However, during operation of the site, the applicant's data capture was sufficient to meet all criteria. Therefore, the applicant did not use the SRDT method. The EPA-recommended method to account for calm winds is to disregard hourly concentrations calculated under calm wind conditions (less than 1.0 m/sec). Under the Auer classification method, the land use at the Anderson Bay facility is classified as rural. Rural dispersion coefficients for the IGM and ISC models were set for this parameter.

Figure 5.2-1 Wind rose for YPC 12-meter Meteorological Data

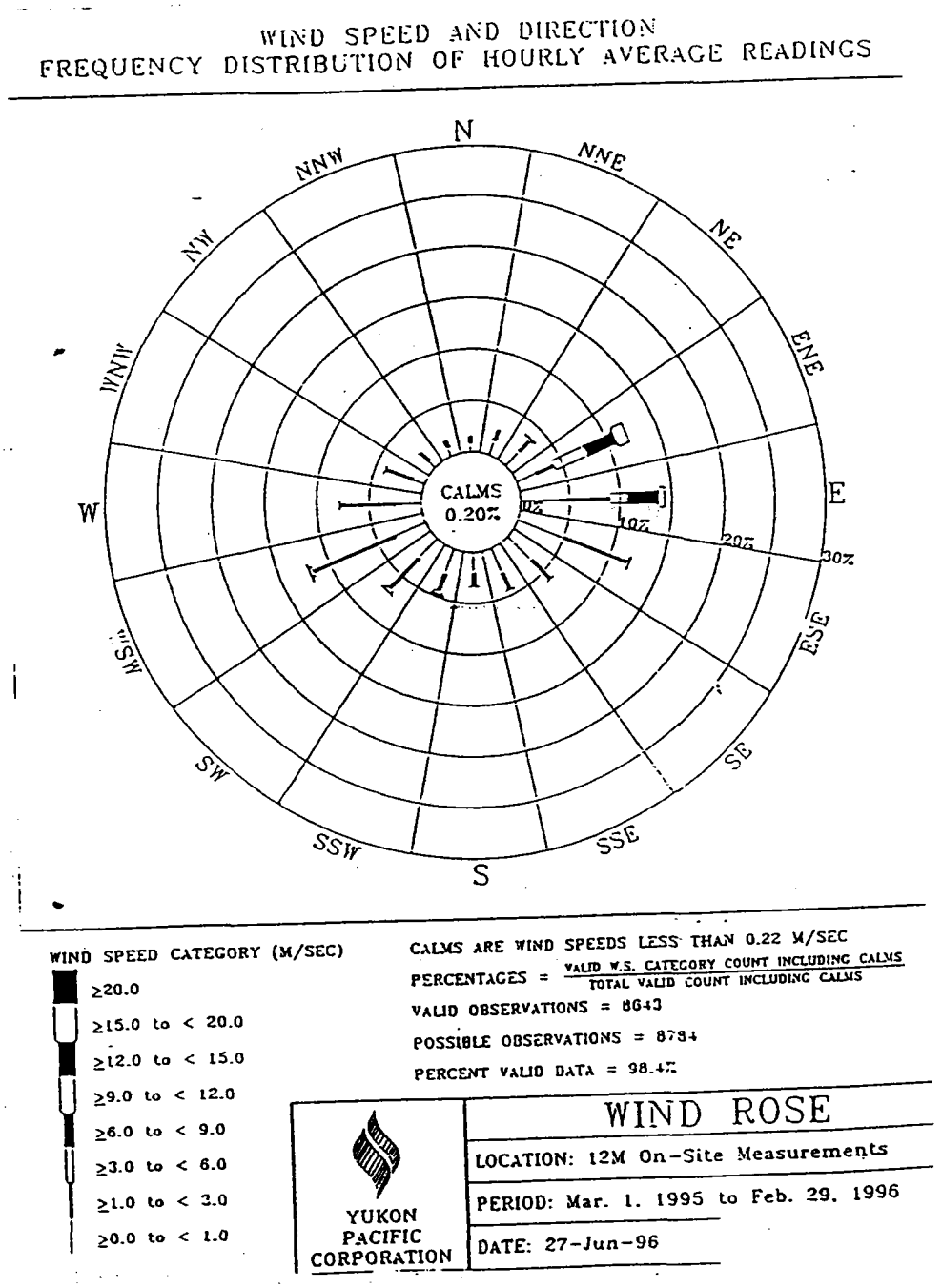

Figure 5.2-2 Wind rose for YPC 39-meter Meteorological Data

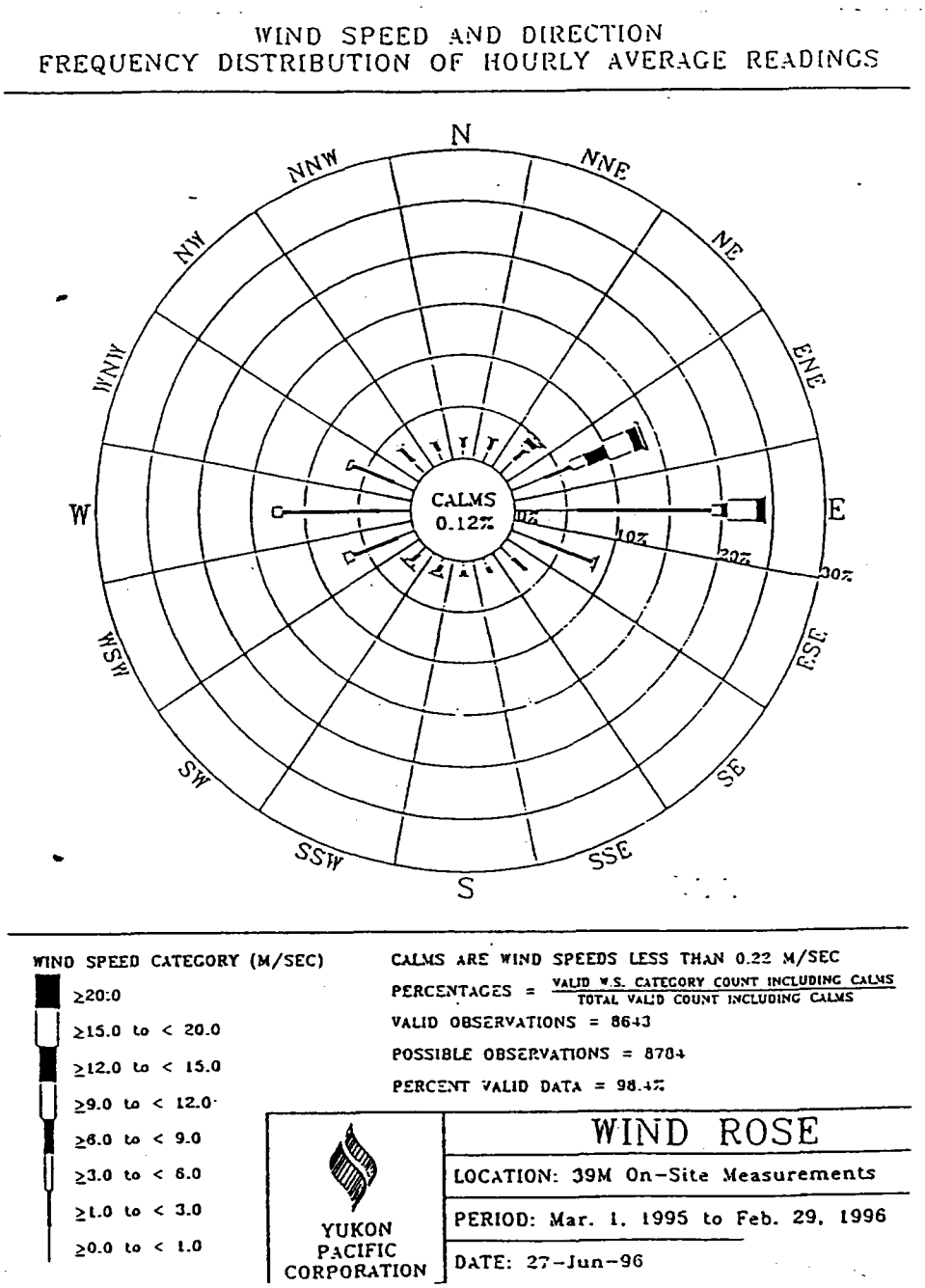

5.3 AMBIENT AIR CONTAMINANT MONITORING

18 AAC 50.310(d)(1) requires PSD applicants to submit ambient air quality data if the existing concentration exceeds a significant monitoring concentration threshold for the pollutant(s) subject to PSD review. The Department requires ambient pollutant data if the existing air quality or the impact of the proposed source or modification is equal to or greater than these concentrations listed in 18 AAC 50.310(d)(2), Table 6. For the criteria pollutants, an applicant must show continuous representative air quality monitoring data, to establish existing air quality concentrations in the vicinity of the proposed source or modification. However, no pre-construction monitoring data will generally be required if the ambient air quality concentration before construction is less than the listed significant monitoring concentrations. This criteria is not the case for the YPC project. The ambient data may then be used as a background value that is added to modeled concentrations from the proposed project and existing sources to estimate the total ambient impact.

The modeling of nitrogen dioxide (NO_2) concentrations also requires the use of additional ambient data or assumptions. The NO_X emissions from combustion sources are typically 90 percent nitrogen oxide (NO), an air contaminant with no ambient standard, and 10 percent NO_2. Therefore, applicants who must demonstrate compliance with the ambient NO_2 standards and increments need to determine how much of their nitrogen oxide emission is eventually converted to NO_2 in the atmosphere. The easiest approach for dispersion modeling is to assume that all NO is immediately converted to NO_2. While this approach is quick and simple, it also overestimates what really occurs. Therefore, applicants may use alternative approaches to estimate how much NO is converted to NO_2.

If the maximum NO_2 concentration predicted should exceed the ambient standards and increments, the applicant must use a second-tier analysis, in which an empirically-derived NO_2/NO_X ratio of 0.75 is assumed as a default conversion ratio (Model Guideline-Supplement C). The results of the modeling for NO_X in the YPC application have been based on the use of the default 0.75 ratio value (Dr. Chu, AWMA-1991).

In order to compare the model calculations with the NAAQS, the Applicant accounted for the contribution of other pollutant sources in the Valdez air shed. The Applicant added the maximum measured pollutant concentrations at these monitoring sites to the modeled impacts of the proposed YPC sources. The Applicant then compared the resulting totals with the NAAQS. YPC received approval for the use of the air quality monitoring data collected during operation of the Valdez Air Monitoring System (VAMS) (see Figure 5.3-1) to represent existing pollutant concentrations at the Anderson Bay site (ADEC, August 25,1995). The "West Terminal" VAMS monitoring site was chosen due to its proximity to YPC and to provide data for the maximum pollutant concentrations. Accordingly, the West Terminal data will provide a conservative representation of pre-YPC project pollutant concentrations at the Anderson Bay site.

Figure 5.3-1 VAMS Sites

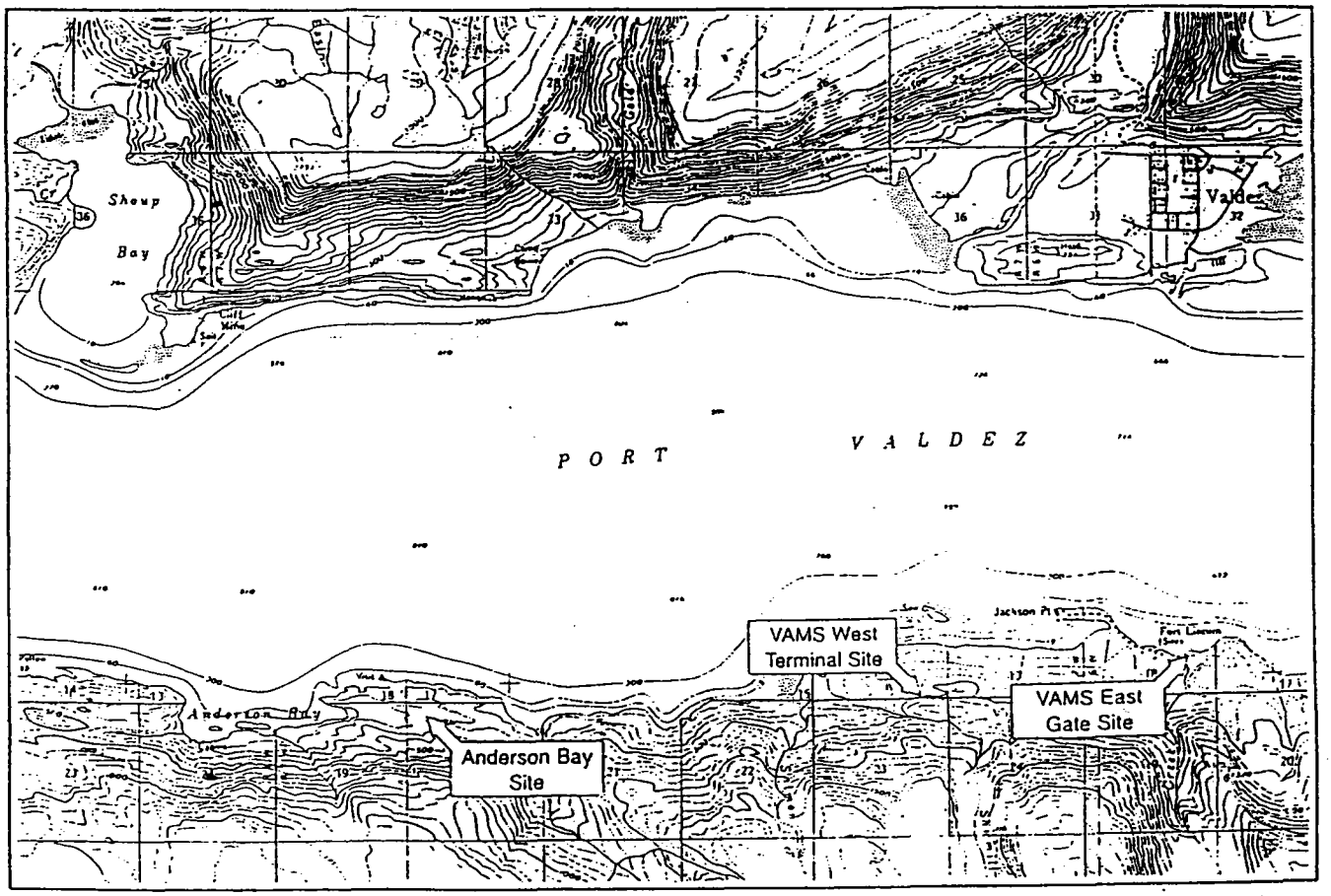

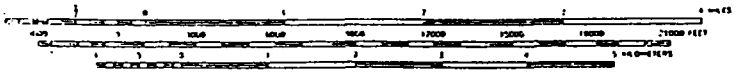

Location of VAMS West Terminal Monitoring Site Relative to Proposed Anderson Bay Project

State regulation 18 AAC 50.310(d) requires PSD applicants to conduct local ambient monitoring if the predicted ambient air quality impacts exceed given thresholds. For applicants subject to NO_2 requirements, the threshold is 14 micrograms per cubic meter ($\mu g/m^3$). The applicant satisfied the pre-construction monitoring requirement by substituting data from the VAMS stations. Although this data was collected more than three years before the application date, the Department accepts their use as more conservative. A preliminary review of the more recent data set indicates subsequent measurements have been lower that the 1991-92 application maximum values.

In a meeting among YPC, EPA, Alaska DNR, and the Department on June 6, 1994, EPA staff suggested that use of existing ambient air quality monitoring data in the Valdez air shed could be used to provide a conservative representation of background pollutant concentration levels at Anderson Bay. Accordingly, YPC petitioned the Department for approval to use the VAMS data in lieu of pre-construction monitoring. Specifically, YPC proposed use of the maximum recorded concentrations at the "West Terminal" VAMS monitoring site over a one-year period during 1991-92 for each pollutant and averaging time corresponding to the ambient standards. YPC's petition demonstrated that this use of the VAMS is consistent with EPA requirements for data quality, currentness, and representativeness. The Department agreed with these findings (ADEC 1995) and approved the use of the VAMS data to represent baseline pollutant levels in the YPC air quality impact analysis. The concentration values used for this purpose are presented in Table 5.3-1.

Table 5.3-1: VAMS Monitoring Data Used for Background Pollutant Concentrations in the Anderson Bay Air Quality Impact Analysis

Pollutant	Averaging Time	Maximum Concentration ($\mu g/m^3$)	Date of Occurrence
CO	1-Hour	1,282.0	12/03/91
	8-Hour	932.0	03/28/92
NO_2	Annual	8.1	10/01/91-09/30/92
PM_{10}	24-Hour	87.0[Note 1]	09/23/92
	Annual	9.1	10/01/91-09/30/92
SO_2	3-Hour	117.2	08/10/92
	24-Hour	32.0	03/16/92
	Annual	7.2	10/01/91-09/30/92

Note 1: Measurements have occurred greater than this value, but were excluded as exceptional events due to high winds.

The applicant has conducted several modeling analyses of the potential emission increases associated with the construction of the YPC project. The maximum annual NO_2 concentration modeled is about 18 $\mu g/m^3$, which is greater than the 14 $\mu g/m^3$ threshold provided in 18 AAC 50.510(b)(2). However, YPC has presented VAMS data to demonstrate that the existing ambient levels for this pollutant are less than the required monitoring threshold (8 vs. 14). Therefore, the Department agrees YPC's modeling analysis shows that pre-construction monitoring is not required for NO_2 impacts to support this PSD application.

5.4 COMPUTER MODELING

As stated in Section 5.1, the applicant used computer analysis to predict the CO, NO_2, SO_2, and PM-10 air quality impacts from operating their facility as requested in their permit application. The actual modeling analysis was conducted by SECOR International, Inc., and then compiled and submitted by Yukon Pacific Company Limited Partnership (YPC/applicant). For each pollutant, the applicant conducted two analyses to show that the requested permit limits would not: 1) Cause a violation of ambient air quality standards, or 2) exceed ambient PSD increments. The following section describes which model(s) were selected, how the analyses were conducted, and the results of applicant's analyses.

5.4.1 Model Selection

EPA has developed several computer models to estimate ambient air quality impacts from pollution sources. These models are listed in Appendix W of 40 CFR, Part 51. The models differ by how they treat various sources, whether or not they need actual weather data, and how they handle terrain features that rise above plume height. They are classified as screening, refined, simple terrain, and complex terrain models.

"Screening" models use generic weather conditions to provide conservative estimates. YPC conducted a screening air quality modeling analysis using hypothetical meteorological input data. However, both EPA and the State determined this analysis failed to provide a sufficient basis for a compliance determination with the NAAQS and PSD increments. To develop the required on-site meteorological data necessary for an acceptable analysis of the project impacts, YPC installed a meteorological station consistent with applicable regulatory siting and instrument guidelines in March 1995 (YPC 40-meter tower), as described in Section 5.2.

"Refined" models require actual weather data to provide more precise estimates. "Complex terrain" models typically provide the best estimates at ambient sites ("receptors") that are above a source's stack tops. However, they require a detailed terrain database, and typically, can only estimate the impact from "point sources," such as boiler stacks, not from "area" sources, such as the collective impact from residential heating. In addition, complex terrain models cannot estimate the increased concentrations that can occur from down wash due to "eddies" that form around nearby buildings. Some complex terrain models also require extremely detailed weather

data that can only be obtained through an extensive and technically complex monitoring program. Simple terrain models that predict ambient impacts at sites below a source's stack are easier to set up and run, and can generally handle a wider variety of sources than complex terrain models. Simple terrain models may be designed to handle down wash conditions.

YPC discussed dispersion modeling in their Meteorological Quality Assurance Plan, September 1994. This protocol described how they would conduct their modeling analysis. YPC proposed to use EPA's "Industrial Source Complex 2 Short Term (ISCST2) model and the Rough Terrain Dispersion Model (RTDM). ISCST2 is the refined computer model typically used to estimate the ambient air quality impact from industrial facilities. It requires actual weather data and is designed to estimate ambient concentrations from numerous emission sources at different locations. ISCST2 can also estimate the effects of down wash. Because the model uses hourly weather data to calculate an hourly concentration, it is able to average concentrations over the 3-hour, 8-hour, 24-hour and annual periods upon which ambient standards and increments are based.

However, in late 1995, EPA had replaced the ISCST2 model with a more current version called ISCST3. These model changes did not affect algorithms used in the YPC project analysis. Since the modeling analysis for operational impacts did not involve any area source prediction nor a particle deposition calculation, the results of the IGM/ISCST2 are identical to an ISCST3 run. However, YPC also used the ISCST3 model specifically for the evaluation of project construction impacts, consistent with the model guidelines. RTDM is applicable for calculating the impacts of each project point source at receptors above that source's release height, and ISCST2 applies to receptors below the release heights.

This method of handling of intermediate terrain receptors is consistent with current EPA policy. EPA has issued letters confirming the equivalency of the IGM model to Guideline models for use in regulatory applications. YPC used IGM to estimate contributions from off-site sources within the Valdez air shed. The IGM and Complex I option was used for sources with relatively large distances between YPC and that source. The modeling only addressed the incremental increase in emissions and as such, contributions to receptors are relatively low. The operational impacts of YPC were conducted with IGM and a one-year record of hourly on-site meteorological data. RTDM required the input of stack height meteorological data collected at the 39-meter level of the YPC tower.

EPA is continually revising their computer models to better estimate given conditions. Therefore, each model has a version number representing the year and calendar date of its release. YPC used ISCST2, version 95113. Although this is not the most current version, as previously explained, changes between ISCST2 and ISCST3 did not alter relevant modeling algorithms, allowing this analysis to remain within the Federal Guidelines.

Under model guidelines, the ISC model requires hourly surface weather data, along with morning and afternoon "mixing height" data. The surface and mixing height data must be pre-processed by another computer program to provide the hourly stability class, wind direction, wind speed, temperature, and mixing height. YPC used the 1995-96 YPC/Anderson Bay on-site meteorological data discussed in Section 5.2 to provide the model(s) with local surface conditions. Since local mixing height data are not available and no alternate site was considered representative by the State or EPA, YPC adopted the very conservative approach incorporated by the EPA SCREEN3 model. This is the plume height plus one-meter approach.

5.4.2 Analysis

General Input Data

In addition to meteorological data or assumptions, ambient concentrations are dependent on the amount of pollution released, and on the emission (plume) characteristics. In general, plumes that are relatively hot will rise higher in the atmosphere and disperse better than cooler plumes. In the same manner, plumes that leave stacks at relatively high flow rates tend to initially rise higher in the atmosphere and disperse better than slow plumes. Therefore, computer modeling requires specific information concerning emission rates, stack heights and diameters, exhaust flow rates and temperatures, and relative source locations. The YPC project has a projected nine year construction period. These construction activities and equipment inventory have been developed by YPC for the different years of the project schedule to determine the combination of activities that would produce the highest quantity of regulated emissions. The proposed total annual and peak daily emissions from construction are summarized in Table 5.4.1. Details on the assumptions and equipment operational parameters are found in Appendix A of the YPC PSD application. YPC assumed all of the facility's natural gas-fired equipment would be operating every day and hour of the year, and at the maximum rated capacity, as shown in Appendix A of the YPC application.

Table 5.4-1
PROPOSED YEARLY ALLOWABLE EMISSIONS DURING CONSTRUCTION ACTIVITIES AT YPC

Avg. Period	Year	PM10	SO2	NOX	CO	VOC
Annual (tons/yr)	Year 0	28.1	27.9	325.7	1,033.7	68.9
	Year 1	49.6	48.5	570.5	1,128.2	90.0
	Year 2	83.5	104.5	1,083.6	1,308.0	130.3
	Year 3	78.6	101.4	1,068.1	1,288.0	127.0
	Year 4 & 5	70.4	96.3	1,032.5	1,464.2	128.2
	Year 6, 7 & 8	42.1	53.8	476.8	1,095.8	84.9
Operation Sources	Year 6, 7 & 8	288.7	700.6	2677.7	1,282.5	347.0
Peak (lb/day)	Year 0	312	306	3,538	11,586	773
	Year 1	524	510	5,919	12,408	979
	Year 2	1,063	1,065	11,337	14,300	1,420
	Year 3	990	1,020	11,000	14,046	1,373
	Year 4 & 5	608	639	7,087	10,104	875
	Year 6, 7 & 8	415	347	3,259	7,561	576
Operation Sources	Year 6, 7 & 8	1,582	3,839	14,673	7,028	1,902

For an ambient air quality compliance demonstration, the new or modified source's impacts must be added to the impacts from existing sources and the "background" concentration that would occur without any local sources. Therefore, the applicant modeled the emissions from their facility, as well as the other numerous emission sources in the Valdez Arm air shed.

The applicant must obtain exhaust information for each pollutant and conditions to be modeled. Maximum short-term emission rates and exhaust flows are usually much larger than long-term average emission rates and exhaust flows. Therefore, the modeling of maximum short-term impacts, such as maximum 3-hour SO_2 concentrations, normally requires a different set of emission rates, flow, and temperature data than the modeling of long-term impacts, such as annual average SO_2 concentrations.

The applicant provided proposed emission rates and stack parameters for their facility in their PSD application. Appendix B of the application presents the supporting data from potential vendors for the operational phase and the associated point source emission estimates or operational parameters. YPC was also able to provide the emission rates and stack parameters for non-YPC sources such as: Alyeska Terminal, Petro Star Refinery, and the City of Valdez since they are, or recently have, worked on permit applications for these facilities. This methodology follows the protocol that the Department accepted for the Alyeska 1996 Tanker Vapor Recovery Project. YPC assumed a start date for full operation to be the year 2007.

The YPC compressor and electric generator-turbines (gensets) will be the major sources of NO_X, CO, and PM_{10} for the YPC facility during operations. To establish a conservative set of performance parameters for the General Electric Frame 5 turbines operating at 100 percent rated capacity, the applicant set the ambient air temperature at 15° F. This analysis method ensures that pollutant concentrations are not underestimated, because the largest potential emission rates are applied over all meteorological conditions anticipated to occur during the year. National Weather Service data for the Valdez airport indicates that air temperatures of 15° F or lower occur less than 5 percent of the time at the proposed project site. Economics denotes that the LNG plant to be operated at the optimum amount of on-line horsepower or near 100% of capacity. Therefore, the boil-off gas compressors and refrigerant trains have been conservatively evaluated at maximum capacity for a full 8,760 hours per year.

The modeling assumptions used for the gensets have been set to a conservative scenario. First, all seven units have been modeled at 100% capacity versus the predicted operating scenario of six units. Second, the annual emissions have been calculated at the 15° F, versus the 40° F average annual ambient temperature for Valdez. Third, for the unit equipped with the heat recovery steam generator (HRSG), both the genset and the auxiliary duct burner within the HRSG are assumed to have been fired with distillate fuel at their rated capacities. This should produce a lower plume buoyancy (250° F exhaust versus vendor 850° F), compounded with the increased NO_X, SO_2, and PM_{10} emissions from distillate fuel and duct burners.

In addition, maximum short-term ambient concentrations may not always occur during the "full-load" conditions that typically produce the largest emissions. The relatively poor dispersion that occurs with lower exhaust temperatures and slower part-load exit velocities may produce the maximum ambient impacts. Therefore, EPA recommends that part-load conditions be analyzed as well as full-load conditions. The applicant included a part-load assessment in their application, which shows that the maximum impacts do occur during full-load conditions.

The Department analyzed the assumptions of the part-load assessment and found them to be conservative. The highest ton/year pollutant of concern, NO_X, has an annual averaging period for its regulatory standard. During reduced heat firing rates for the lower loads that occur for short periods, the associated changes in plume rise are predicted to be only about 10%. If a direct increase in receptor concentration was to occur from this plume adjustment, the resulting predicted maximum impact from YPC might increase from about 18 ug/m^3 to about 19 ug/m^3. When this is added to the other increment consuming sources, the total predicted impact at the worst-case modeled receptor would be about 19.3 ug/m^3. This value is less than the increment for the regulated pollutant NO_X.

YPC has analyzed compliance for other regulated pollutants, such as PM_{10}, SO_2, and CO from this proposed facility. This demonstration has been made to address requirements for the construction and operational phases of the proposed project. The Department agrees that construction activities will produce the highest emissions of PM_{10}. However, as construction activities are by nature temporary, emissions from such may be eligible for exemption for compliance with the PSD increment under 40 CFR 51.166(f)(1)(ii). The Department confirmed the application of this exemption with EPA Region 10 (EPA 1996a). YPC is, however, required to demonstrate compliance with the NAAQS for PM_{10} during its construction activities. The results of the modeling analysis indicated the maximum predicted value to be 115.6 ug/m^3--24-hour average and 11.6 ug/m^3--annual average.

However, the State of Alaska State Implementation Plan (SIP) does not provide for an exemption from a demonstration to comply with the increments for NO_2 and SO_2 during construction activities. The maximum increment consumption for NO_2 during construction was predicted to be 18.2 ug/m^3, annual averaged. YPC modeled the maximum increment consumption for SO_2 during construction activities to be 108.9 ug/m^3, 3-hour averaged; 23.7 ug/m^3, 24-hour averaged; and 2.4 ug/m^3, annual averaged. These values do not exceed twenty-two percent (22%) of the increment. There is no PSD increment for the regulated pollutant CO, but a demonstration of compliance with the NAAQS is required. The maximum predicted impact on the (CO) NAAQS during construction activities was 5,414 ug/m^3, 1-hour average; and 1,735 ug/m^3, 8-hour averaged. These values do not exceed eighteen percent (18%) of the standard.

Down wash

Down wash refers to conditions where wind "washes" the plume down to the ground due to eddies that form down wind of buildings or other obstructions. Down wash can occur when a stack height is less than a height derived by a procedure called "Good Engineering Practice" (GEP), as defined in 18 AAC 50.900(23). The GEP stack heights are determined by using the procedure described in EPA's Guideline for Determination of Good Engineering Practice Stack Height (Technical Support Document for the Stack Height Regulations) (revised) EPA-450/4-80-023R (June, 1985). No down wash effects are expected for a stack that meets GEP height criteria.

The modeling of down wash impacts requires the inclusion of dimensions from nearby buildings. EPA has established specific algorithms for determining which buildings must be included and for determining the profile dimensions that would be "seen" by a given stack. They have also incorporated these algorithms in a separate computer program called the "Building Profile Input Program" (BPIP) (see Appendix F in the YPC application). The applicant used BPIP to determine the needed building profiles for use with their analytical models.

Increment Analysis

Both the construction and operation stages of the YPC project require a demonstration of increment compliance, except for construction PM_{10} emissions. The refined receptor grids analysis results are summarized in Table 6.2 of YPC's PSD Application. (YPC 1996). As previously indicated, this analysis is believed to be conservative since the input emission bases represent the period with the expected highest short- and long-term emissions during the entire project. As stated in Section 5.1, each Air Quality Control Region has its own baseline date. YPC is located in the Southcentral Alaska Intrastate Region, and the applicable baseline date for particulate matter and sulfur dioxide is October 26, 1979. The baseline date for nitrogen dioxide is February 8, 1988, statewide.

Table 5.4-2 Fine Receptor Grid Results for Construction Activities

Pollutant	Ave. Period	YPC Contribution (ug/m³)	Contribution of other sources (ug/m³)	Total Increment Consumed (ug/m³)	Class II Increment Ceiling (ug/m³)	Location of Maximum Concentration		
						East (km)	North (km)	El. ft.
SO_2	3-hour	108.9	0.0	108.9	512	529.40	6771.60	200
	24-hour	21.9	1.8	23.7	81	520.50	6771.75	120
	Annual	2.2	0.2	2.4	20	523.65	6772.33	0
NO_2 (Note 1)	Annual	18.1	0.1	18.2	25	523.60	6772.33	0

Note 1: Results from modeling are concentrations of total NO_X
NO_2 concentrations were obtained by ambient ratio method with an assumed NO_2/NO_X ratio of 0.75

The Department accepted the applicant's specific approach for the unique meteorological and terrain situation occurring in the Valdez air shed with the following comment. The demonstration concerning minor stack changes provided by the applicant applies to the meteorological and terrain conditions found in the Valdez area. For nitrogen dioxide impacts, the applicant used vendor supplied turbine emission(s) data equal to or greater than the Department has imposed as BACT emission limits. In keeping with the Department directive to maintain a conservative analysis, YPC placed the following parameters on operations. In the applicant's air quality analysis, all seven genset turbines are at 100% capacity and to produce emissions at a rate corresponding to an ambient temperature of 15° F throughout the year, although the actual temperature at Anderson Bay exceeds this value 95% of the time. In addition, both dual-fired gensets were assumed to operate continuously on distillate fuel including the HRSG duct burner, Source 38b. The distillate fuel has a fuel sulfur content of 0.25% by weight. The highest short-term emission rates not only have distillate fuel for turbines and burners, but the tankers at YPC would be operating on 3.5% sulfur content fuel. The primary roads within the YPC site will be paved to maximize the control of particulate matter. Therefore, the potential impact evaluation of the project is conservative for NAAQS and increments impacts.

Receptor Grid

Several receptor grids have been used to conduct the modeling analysis for the YPC facility. The first receptor grid was used to: 1) identify the specific area of potential concern for the facility-wide impacts (significant impact zone); and 2) the significant impact zone of influence for use in the area-wide modeling assessment.

To address the likely maximum predicted concentrations from the construction and operational phases of this project, a rectangular grid of receptors spaced at 500 meters was formatted across the entire Valdez air shed. There were additional discrete receptors, as well as receptors at 100-meter intervals around the proposed property boundary.

For the facility-specific modeling, the applicant identified a refined receptor using a 50-meter spacing around the maximum concentration for each pollutant and averaging period developed in the coarse grid analysis. Since the ranking of the several highest coarse-grid concentrations can change from the coarse to fine grid simulations, closely spaced receptors were placed around each of the top concentrations identified in the coarse grid model analysis. In general, at least 400 fine grid receptors were placed around a maximum coarse grid site. A discrete receptor was placed at the man-camp for the construction phase analysis.

The uniqueness of YPC's two-stage project required that two separate project boundaries be developed. One was defined for the construction stage and one for the operational stage, each used in the simulations of projected air quality impacts, as shown in Figure 5.4-1. YPC proposes to set a vessel restriction zone (1,000 to 2,000 feet from the shoreline) during construction, after consultation with the U.S. Coast Guard. For the operational phase, YPC assumed no buffer zone in the second ambient air impact analysis.

The use of the IGM model and the RTDM model in a complex terrain application required development of terrain elevation profiles to simulate the effects of terrain on projected plume concentration at these elevated receptors. If a single source or source group is analyzed, these profiles are developed by inputting the horizontal distances from the source or source group to the locations where terrain elevations reach specific levels between the lowest stack height and the top of the terrain feature in each of 36 radial directions. YPC has identified 48 potential emission sources and as such, the IGM model includes a refinement that allows multiple source groups and multiple sets of terrain profiles to be used. Accordingly, the 48 sources have been combined into 11 separate source groups (A through K), each of which is contained within a circle of a 100-meter radius (see Figure 5.4-2). A set of digital USGS terrain profiles were developed for each of these sources and used in the IGM model runs:

Figure 5.4-1 Receptor Grid
Construction Phase

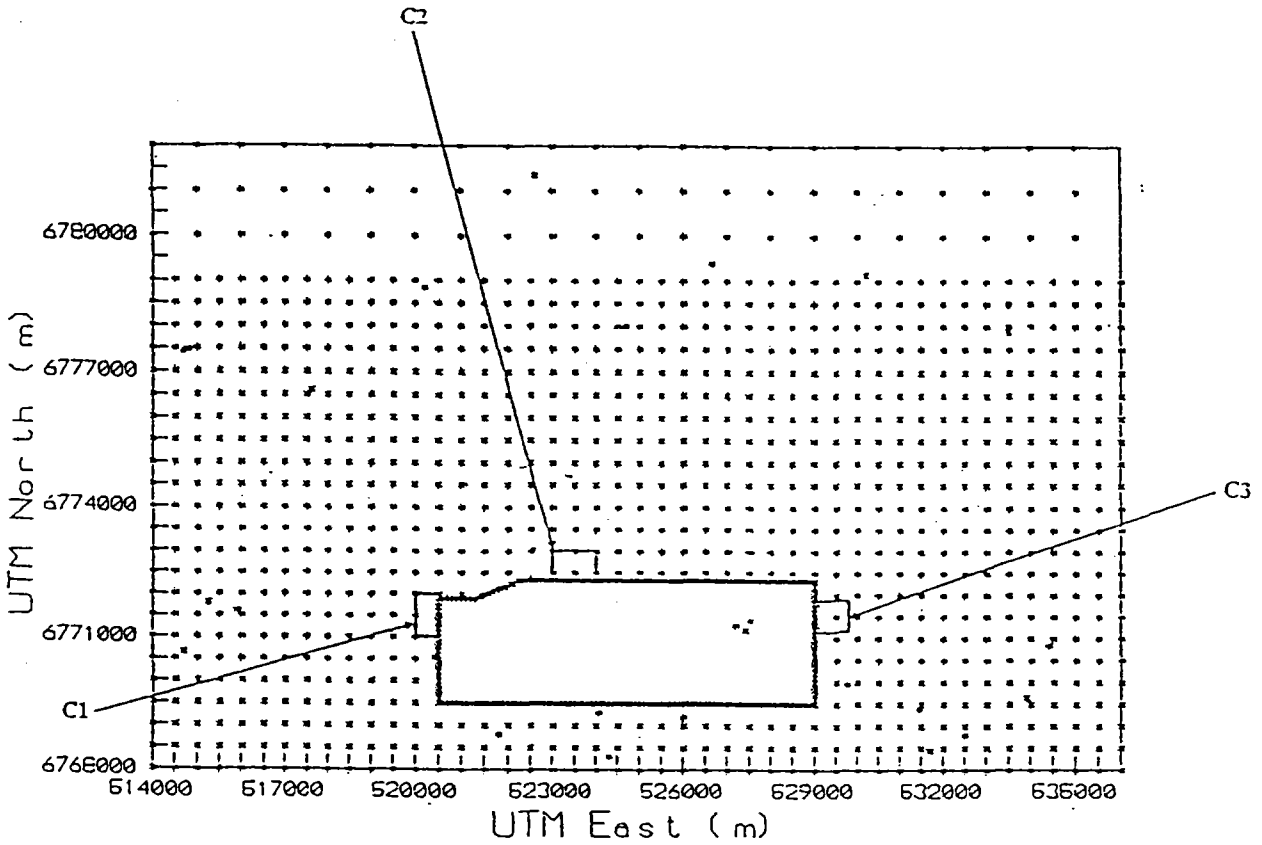

Boundaries of Finely-Spaced Receptor Grids (C1-C3) Used in the Construction Modeling Analysis

Figure 5.4-2 Receptor Grid
Operational Phase

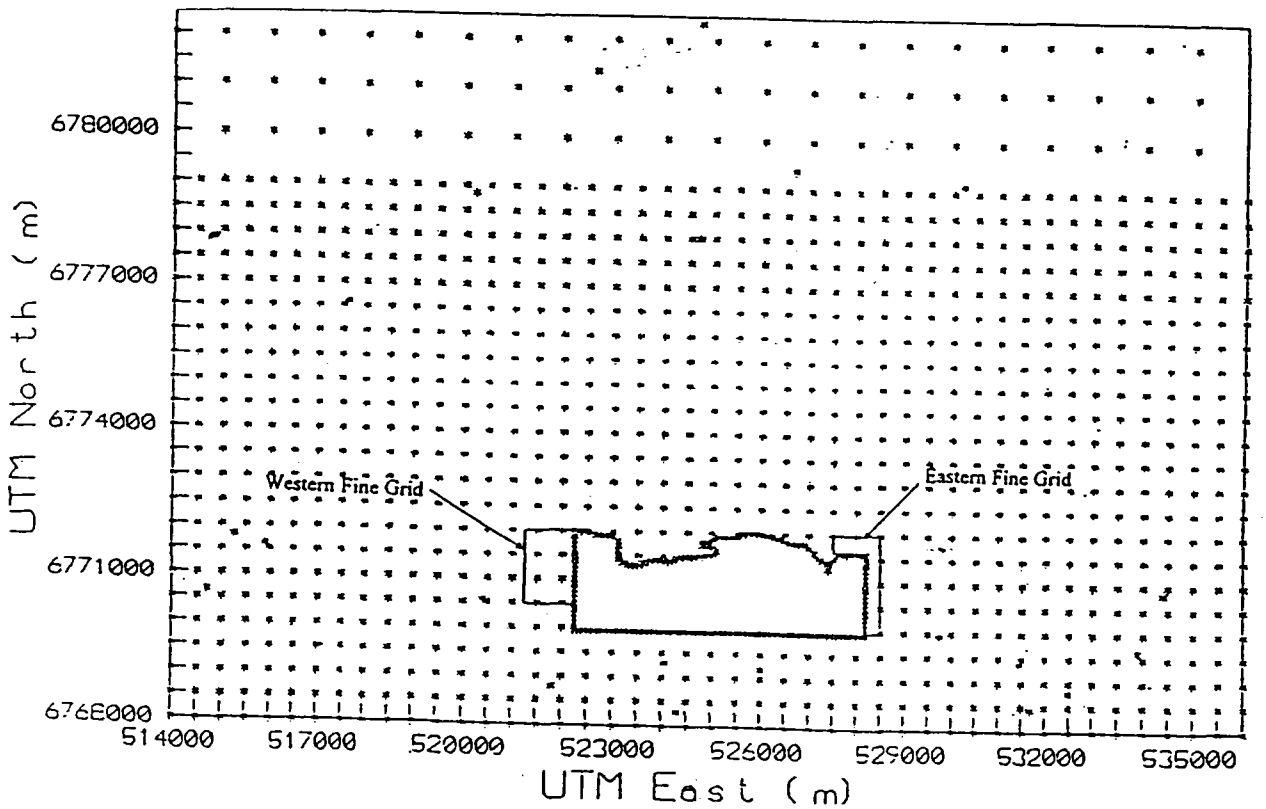

Boundaries of Finely Spaced Receptor Grids Used in the PSD Increment Consumption Analysis

Department Assessment

The Department reviewed the modeling analysis submitted by YPC for the Anderson Bay LNG and marine terminal. The modeling methodology for the YPC project is acceptable and consistent with the US EPA Guidelines on Air Quality Models (revised) (USEPA, 1996). The analysis applies to conditions existing at the time of the application with no warrantee to the accuracy of information supplied by others. Any reliance on this report by a third party is at such party's sole risk. The analysis adequately shows that the emissions associated with the construction and proposed operation of the facility will not cause or contribute to a violation of the ambient air quality standards provided in 18 AAC 50.010 or the increments provided in 18 AAC 50.020(b)(2). However, the Department does have comments on a few minor issues, which are discussed below.

The Department reviewed the supporting data and assumptions for the volume source and point source activities in the construction phases. The magnitude and lack of a comparable project does not enable the Department to verify if all assumptions are absolute and correct. However, given the degree of basic conservancy presented in this analysis, it is believed that any minor discrepancies will have a negligible impact on the results. Tables A-1a; A-1b; A-2a; A-2b; A-3; A-3a; A-4; A-5; A-6; A-6a; A-6b; A-7; and A-7a; of Appendix A in the YPC application and the model input files indicate the assumed source parameters and degree of operations for these specific activities and year of event. YPC has retained Ogden Environmental and Energy Services for dispersion modeling. The Department and Ogden Environmental and Energy Services, have re-run several cases of the ISC/IGM modeling files using the assumed YPC source parameters and operational conditions supplied in the YPC original application. No significant differences were determined. Negligible differences in predicted air impacts were due to the rounding assumptions of the author. The same conclusion should apply for the other grids and pollutants.

5.4.3 Results

Table 5.4.3-1 shows the Alaska ambient air quality standards and the predicted maximum concentrations from defined local sources (including background) during the operational Anderson Bay project. Since ambient concentrations vary with distance from the each source, the predicted maximum values shown represent the highest value that occurs somewhere in the defined receptor grid of the Anderson Bay air shed. However, since a significant area within the facility property has been excluded by definition as non-ambient air, they do *not* represent the highest concentration that might occur inside the facility boundary.

The Department also notes that whenever there are numerous sources in an area, modeled violations may be caused by only some of the facilities. As stated in 40 CFR 51.165(b)(2), a source is considered to "cause or contribute" to a violation of an ambient air quality standard only if the source's impact exceeds a minimum threshold, or "significant impact level." Sources

with concentrations that are below these values are considered to be negligible contributors to the violation. Therefore, the significant impact levels from 40 CFR 51.165(b)(2) are also shown in Table 5.4.3-1 for each pollutant, along with the maximum concentration from YPC that occurs during the same time and place.

As shown in Table 5.4.3-1, the area-wide modeling results show no predicted violations of the CO, NO_2, PM_{10}, or SO_2 ambient standards. All other modeled pollutants and averaging times are well within the ambient standards. The potential 24-hour PM_{10} significant impact occurs at a location on YPC's property boundary. The applicant's maximum contribution during this period is predicted to be about 12% of the standard.

Table 5.4.3-2 shows the State's Class II increment standards and the maximum increment concentrations modeled by YPC. The table shows that the annual average PM-10, SO_2, and NO_2 concentrations are within the Class II increment standards. However, when considering all area-wide sources, there appears to be a significant consumption of the annual NO_2 Class II increment. The Department believes the final design configuration will more accurately determine the expected increment impact. Therefore, the Department has imposed a permit condition that YPC notify the Department of YPC changes to the facility configuration and activities that are different from those assumed and modeled in the August 1996 application. Upon review, the Department will make a written determination (within 60-days of receipt), if such changes warrant a supplemental ambient air impact modeling assessment.

As was done for the ambient standard analysis, the applicant evaluated the impacts from their facility and other increment consuming sources identified in the Anderson Bay area to address potential increment violation problems. At each receptor with a modeled increment of a significant level, the applicant compared the contribution from their facility and the other increment sources to the appropriate significant impact level. As shown in Table 5.4-3-2, the maximum concentrations for the regulated pollutants are greater than the prescribed significant impact levels. However, the maximum predicted PSD increment consumption by either the proposed YPC facility or other increment consuming sources do not cause or contribute to a violation of the Class II increments.

Table 5.4.3-1 Air Quality Standard Analysis Worst Case Facility Operation

Pollutant/Avg. Time	Ambient Standard (μg/m³)	Max conc. from ALL sources, plus bkgd. (μg/m³)	Significant Impact Level (μg/m³)	Max. contribution from YPC facility (μg/m³)	Contribution Attributed to background and other sources (μg/m³)
PM-10:					
annual	50	*13.8*	1.0	*4.4*	*9.1*
24-hr max	150	*107.6*	5	*18.5*	*87.0*
SO2:					
annual	80	*18.2*	1.0	*10.2*	*7.2*
24-hr max	365	*87.5*	5	*55.3*	*32.0*
3-hr max	1300	*276.7*	25	*159.5*	*117.2*
NO2: annual/Note 1	100	*26.3*	1.0	*17.9*	*8.1*
CO:					
8-hr avg	10,000	*1,140.8*	500	*208.8*	*932.0*
1-hr avg	40,000	*1,576.5*	2,000	*294.5*	*1,282.0*
Ozone: 1-hr avg	235	*n/a*		*n/a*	*n/a*
Reduced sulfur: 30-min avg	50	*n/a*		*n/a*	*n/a*
Lead: quarterly arithmetic mean	1.5	*n/a*		*n/a*	*n/a*
Ammonia: 8-hr avg	2,100	*n/a*		*n/a*	*n/a*

Note 1: NOx; NO_2 predicted concentrations have been developed by the Guideline recommended algorithm of the ambient ratio method with an assumed (0.75) NO2/NOx default value conversion factor.

Table 5.4.3-2 PSD Increment Analysis, Facility Operation

Pollutant/ Avg. Time	Class II Increment ($\mu g/m^3$)	Max increment consumed from ALL sources[2] ($\mu g/m^3$)	Significant Impact Level ($\mu g/m^3$)	Max conc. from YPC ($\mu g/m^3$)
PM-10:				
annual	17	*4.7*	1.0	*4.4*
24-hr max	30	*20.6*	5	*18.5*
SO_2:				
annual	20	*11.0*	1.0	*10.2*
24-hr max	91	*55.5*	5	*55.3*
3-hr max	512	*159.5*	25	*159.5*
NO_2: annual	25	*18.2*	1.0	*17.9*

Note 2: As shown in the Table, the proposed YPC project does not cause or contribute to any potential violations of the Class II increments. Additionally, results from the modeling analysis is presented as total NO_X, predicted NO_2 concentrations are obtained by the recommended ambient ratio method with an assumed NO_2/NOx default ratio of 0.75.

As stated, Denali National Park and Preserve is the nearest PSD Class I area to the proposed YPC project. Due to the distance (greater than 150 miles), several large mountain ranges, and complex meteorology, impacts should be negligible. However, to maintain a degree of conservatism for this issue, YPC, at the direction of the Department, modeled several receptor sites deployed at one-kilometer spacing along the southeast boundary of the Park. The results are shown in Table 5.4.3-3 and indicate no potential for a significant contribution at these receptors.

TABLE 5.4.3-3
Maximum Class I PSD Increment consumption at Denali NPP

Pollutant	Avg. Period	YPC Contribution (ug/m3)	Other PSD Sources (ug/m3)	Total Increment (ug/m3)	Class I Increment max. (ug/m3)
SO2	3-hour	0.280	0.100	0.380	25.0
	24-hour	0.040	0.030	0.070	5.0
	Annual	0.004	0.002	0.006	2.0
PM10	24-hour	0.010	0.010	0.020	8.0
	Annual	0.001	0.001	0.002	4.0
NO2	Annual	0.006	0.002	0.008	2.5

5.5 CONCLUSIONS

The applicant has shown that the emissions associated with the proposed construction and operation of the Anderson Bay Facility will not cause or contribute to a violation of the ambient air quality standards or increments listed in 18 AAC 50.010 and 18 AAC 50.020(b)(2) respectively. The Department believes that the applicant's proposed facility fully complies with the showing requirements of 18 AAC 50.315(e)(2).

The applicant has shown that the maximum predicted air contaminant concentrations at receptors for the proposed YPC Facility, except for PM_{10}, 24-hour average value, do exceed half of the ambient standards. The complexity and size of this project lends itself to further dialogue regarding potential post-construction monitoring for this pollutant. Therefore, the Department required that the applicant and State establish a monitoring protocol technical team. Further, if the final YPC design and actual equipment selection for this facility differ from YPC's August 12, 1996 source or operational parameters, the monitoring team will determine if any regulated ambient air pollutant(s) will need post-construction monitoring.

6.0 AIR QUALITY RELATED VALUES AND ADDITIONAL IMPACTS

The Department evaluated environmental impacts from the proposed facility to identify any significant primary or secondary impacts caused by emissions from the proposed construction of the facility. The Department has summarized in this section these air quality impacts and has identified any mitigating procedures necessary to assure prevention of significant deterioration of the area surrounding the proposed facility.

The Department examined the proposal to construct and operate the YPC facility as described in the August 12, 1996 application to determine area-wide compliance with the ambient air standards and increments. As a result of that review, the Department has determined that as proposed and defined in their application (YPC, 1996), the facility impacts and associated growth will not adversely affect air quality related values of soils, waters, visibility, vegetation, endangered or threatened species, noise, or odor.

6.1 PRIMARY IMPACTS

Primary impacts are those air quality impacts caused directly by the proposed construction and operation emissions. The applicant's analysis of air quality impacts on visibility, soils, vegetation, water, aesthetic values, noise, or odor shows that no significant primary impacts are anticipated from the operation of the facility.

6.1.1 Visibility

Visibility has been identified as an important air quality related value for Class I areas in Alaska. The nearest Class I area is Denali National Park located approximately 158 miles (254 km).

The potential for visibility impacts in the nearest Class I PSD area, Denali National Park, depends on the distance the facility is from that Class I area. A visibility impact analysis is required by the Department and EPA if the facility is located within 100 km of the Class I area. At the Department's discretion, major sources or sources subject to adverse meteorological dispersion conditions may be required to evaluate Class I visibility analysis even if they are outside this 100 km radius.

If the facility is located within 50 km of the Class I area, the Department requires a Level 1Visibility Analysis. A Level 1 Analysis should use the EPA Workbook for Plume Visual Impact Screening Analysis-September 1988, which assesses the facility's plume visibility and regional haze default data input to evaluate the visibility impacts at Class I areas. If the facility is less than 5 km away, the VISCREEN computer model developed by EPA is used. Viscreen is used to determine: the sky/plume contrast resulting from NO_2; the reduction in sky/terrain contrast of a coherent plume resulting from NO_2 and particulate constituents; and the reduction in sky/terrain contrast from general haze. For a facility with a distance greater than 50 km but less than 200, a regional haze analysis may be required pursuant to the guidance of the Interagency Workgroup on Air Quality Modeling (IWAQM; EPA et. al, 1993). Since the facility is located greater than 200 km from the Class I area, no visibility analysis is necessary.

The Department has determined because of distance, complex meteorology, and mountainous terrain of the area, that no visibility impacts from the facility are expected at Denali National Park.

The State of Alaska has also identified two "integral vistas" within Denali National Park, where views of distant geographic features are important to visitors' enjoyment of the park. Therefore, visibility impacts to these areas must also be considered. Both integral vistas are located approximately 158 miles from Denali, northwest of the facility. In addition to the great distances involved, meteorological trajectories that would transport emissions to Denali National Park across the Chugach Range would break up any coherent plumes moving toward the park. Thus, the NO_X, SO_2, and PM_{10} emissions from the project described in the facility application will have no perceptible effect on the visibility within the integral vistas from Alaskan Class I areas.

6.1.2 Aesthetic Values

The proposed location of the facility is an undeveloped area, so this will alter the aesthetic integrity of the area. Port Valdez has other developed areas including the Alyeska Marine Terminal, the Petro Star Refinery, and the City of Valdez port. This area is not pristine wilderness since there are other industrial and residential developments within 5 miles of the proposed facility location. Therefore, the Department determines that construction and operation of this facility will not be a significant effect on aesthetic values.

6.1.3 Soils and Vegetation

Major soil factors are dependent on moisture, geologic parent material, organic residue, topographic relief, climate, vegetation, and permafrost. Valdez is located in the sub-arctic maritime climatic zone. This zone is characterized by cool summers, warm winters, and abundant precipitation. Mountainous terrain surrounding Prince William Sound influences local weather and climate. The terrain channels local winds. During winter months, the prevailing wind direction at Valdez is from the east. From May to September, the prevailing wind is from the west.

Valdez averages 65 inches of precipitation a year, with very heavy snowfall in winter months. The coastal area experiences relatively high humidity. The surface winds are strong near inland passes with winds up to 100 knots not uncommon. The mean annual air temperature at Valdez is 38° F, with an average January temperature of 22° F, and July average temperature of 55° F. Temperatures rarely drop below 0° F, nor exceed 85° F.

Prince William Sound area is classified as being sub-arctic alpine, with steep rugged terrain and extensive glaciation and ice fields present. Valdez is located on a well-forested glacial plain, with extensive tidal marshes. During the Pleistocene up through recent prehistoric time, this area of Alaska was covered with ice, and active glaciers occur within ten miles of the Anderson Bay facility.

The soils in the area are classified as Humic Cryorthods, associated with mountain foot slopes and deep glaciated valleys on the north coast of the Gulf of Alaska. The typical soils are a well

drained, gravelly to stony glacial till, with dark subsoil associated with peat. This type of soil is typically very productive and nitrogen-rich. The soils are seldom frozen, but not suitable for agriculture because of steep slopes, rocky characteristics, and soil temperature is kept too cool for desirable vegetation development by glacial and ice melt run-off. However, the soils do support lush vegetation and commercial stands of timber.

In the vicinity of the terminal, the soils are moderately well drained gravelly soil. The soils are moderately acidic, and support stands of Sitka spruce, western hemlock, and black cottonwood, with alder and willow brush and various grasses in non-forested terrain.

Many factors can influence the toxic response of a plant to a given air contaminant, but they can be categorized into four major elements: biological characteristics of plants, the environment in which the plants are growing, pollutant concentration, and duration of exposure. Biological characteristics include genetic makeup and the stage of plant. Although sensitivity to air pollution is well known for many cultivated plants, native and forest species may exhibit a wide range of responses, even among a given species. Environmental factors include climate, light quality and quantity, temperature, relative humidity, and soil nutrition. Ambient air pollutant concentration is the primary indicator of potential impact since damage or injury to plants occur mostly through foliage injury, and not by absorption through plant roots. The concentration of a pollutant and length of the exposure period are collectively known as the dose. The lowest dose that produces an effect is called the threshold dose.

Effects of nitrogen and sulfur compounds are summarized in the section below. No adverse effects to soils or vegetation near the facility site are expected to occur as a result of the facility's smaller emissions of other pollutants, such as particulate matter, carbon monoxide, and volatile organic matter.

Nitrogen Compounds Effects

Ambient air impacts due to the emissions of NO_x from the modified facility, in conjunction with nearby sources of air contaminants, are estimated to be 26.3 $\mu g/m^3$ during operations near at the zone of maximum impact. During construction, combined impacts are estimated to be 26.3 $\mu g/m^3$ Studies of peer reviewed material indicate that for exposures in the range of 940 to 1,880 $\mu g/m^3$ of NO_x, growth retardation in sensitive plants may occur, and that exposures of 3,760 $\mu g/m^3$ have demonstrated acute vegetative injury. The NO_x depositions are not expected to significantly change the nutritional value of the soil to support vegetation.

The effect of NO_2 on several eastern forest tree species has been documented by Kress. Two of the seven species he exposed, Virginia pine (Pinus virginiana) and Loblolly pine (Pinus taeda), exhibited significant height growth effects in response to NO_2 administered at 191 $\mu g/m^3$. Although neither of these species occurs at Valdez, the commonly accepted threshold value for

chronic (10,000- hour) laboratory exposure of crops and trees is 191 $\mu g/m^3$. This is roughly twice the health-based standard.

The U.S. Fish and Wildlife Service has noted that the *Nikiski Vegetation Impact Study*, (Sullivan et. al, 1990), found that chronic atmospheric input of nitrogen compounds have resulted in the loss of boreal lichens, the decline of under story species, and general forest decline in the vicinity of the Nikiski Industrial complex north of Kenai. The report noted that the ambient air concentrations of nitrogen compounds which might have contributed to the damage. These concentrations included large quantities of ammonia emitted as a result of accidental or emergency releases from the Unocal Mitsubishi fertilizer plants, in addition to nitrogenous compounds emitted by other sources such as fuel burning equipment.

Sulfur Compounds

The natural gas primary fuel has been processed to contain no greater than 4-ppm hydrogen sulfide. Distillate fuel will be primarily used as a back-up or secondary fuel for start-up and interruption in the natural gas supply. Therefore, the sulfur dioxide emissions will be much lower than represented in the dispersion modeling described in Section 5. Using this conservative modeling with distillate fuel for the package boiler, turbines, and auxiliary burner and the firewater pumps, the predicted maximum total post-facility concentrations were 276.7 $\mu g/m^3$, 87.5 $\mu g/m^3$, 18.2 $\mu g/m^3$, 3-hr, 24-hr, and annual concentrations, respectively.

Annual sulfur dioxide ambient air impacts due to the potential emissions from the applicant's facility with existing background levels is estimated to be 18.2 $\mu g/m^3$. Studies have shown that chronic vegetative injury for vascular plants may be experienced with an annual average impact of 131 $\mu g/m^3$ of SO_2. A sensitive type of vegetation found in Alaska is lichen. Lichens are known bio-accumulators, and are sensitive to SO_2 and trace metals. Mean annual SO_2 concentrations of 60 $\mu g/m^3$ may reduce the species diversity of lichen communities, and average annual concentrations as low as 30 $\mu g/m^3$ may injure some of the more sensitive lichen species.

One extremely sensitive component of the vegetation found around Valdez Arm is fruticose lichen. Lichens are divided into three different morphological growth types: fruticose, crustose, and foliose. One of the fruticose lichens sensitive to SO_2 is Cladonia fimbriata. Most recent research suggests that Cladonia fimbriata would tolerate an annual average SO_2 concentration of 13 $\mu g/m^3$. An annual concentration between 13 and 26 $\mu g/m^3$ SO_2 would have an adverse impact on lichens. This facility operates on distillate fuel intermittently. The application modeling scenerio included operating all dual fuel-fired equipment on distillate fuel exclusively and operating the diesel-fired engines 50% of the time (rather than only an emergency and periodic testing), and two marine tankers at berth continuously. The expected annual concentrations as conservatively modeled are expected to be 18.2 $\mu g/m^3$ at areas of maximum impact, but the Department does not anticipate a decline of the fruticose lichens species due to the facility's anticipated potential to emit.

Conclusion

Predicted concentrations of NO_2 resulting from the combined operation of the Anderson Bay facility are below the vegetation screening concentrations for the most sensitive vascular and lichen plants.

Modeled concentrations of SO_2 resulting from the operation of the facility exceed the lower range of vegetation screening concentrations for the more sensitive vascular plants and lichens in a limited range adjacent to the terminal. This model is conservative and the Department does not anticipate any effects on these sensitive lichens during normal operating conditions.

For air contaminants, concentrations are not expected to adversely impact vegetation.

6.1.3 Waters

The Alaska Department of Fish and Game has identified Alaskan waters that are important to the spawning, rearing, or migration of the anadromous species of fish. These waterways are critical to the life cycle of these fish. A catalog and atlas have been compiled by the Alaska Department of Fish and Game. These documents identify critical habitats.

The Anderson Bay facility is located on the Southern shore of Port Valdez. The Alaska Department of Fish and Game has identified Alaskan waters in Port Valdez that are important to the spawning, rearing, or migration of the anadromous species of fish. These waterways are critical to the life cycle of these fish.

Over fifty streams and rivers drain into Port Valdez. The Alaska Department of Fish and Game has identified 34 of these streams as anadromous (Alyeska, 1995). Sawmill Creek and Allison Creek adjacent to the facility boundary are used for spawning by chum and pink salmon. The maximum annual NO_2 concentration resulting from the emissions from existing sources and the impact from the facility construction and operation is estimated to be 26.3 $\mu g/m^3$ at the point of maximum impact. This incremental increase in ambient NO_2 concentration is expected to have no impact on the waters in these areas.

The Valdez Coastal Management Program has identified four areas meriting special attention in Port Valdez: 1) Duck Flats and Mineral Creek Islands; 2) Mineral Creek Canyon; 3) Robe Lake; and 4) Keystone Canyon. The Department anticipates no adverse impacts to these areas as a result of the project.

The dispersion modeling included in the application demonstrates compliance with the ambient nitrogen dioxide standard, and shows that the persons engaged in recreational activities or commercial fishing will not be affected by emissions from the facility. In addition, the

Department has concurred that the projected ambient NO_2 concentrations over other nearby water bodies will have no impact on aquatic species or the water resources of the area.

6.1.4 Hazardous Air Pollutants

The proposed project is required to meet the requirement of National Emission Standards for Hazardous Pollutants (NESHAPS). Table 1 and 2 in the supplemental application information submitted to the Department on March 27, 1997, shows that the estimated hazardous air pollutants (HAPs) are less than 10 tons per year of an individual HAP, and less than 25 tons per year off all listed HAPs. Therefore, the Department does not consider this facility a major source of HAPs.

The applicant did not include the flare for lack of representative data in AP-42. The applicant-based estimated HAPs emissions on continuous year-round operation at full capacity for all sources, with the exception of the four emergency diesel engines (firewater pumps and air compressor) which were estimated at operating 50% of the time. The applicant expects feed gas entering the facility to contains only trace amounts (less than 0.1%) of heavier hydrocarbons and not any HAPs.

Distillate oil includes trace amounts of chromium, formaldehyde, manganese, nickel, and poly-aromatic hydrocarbons. The incinerator emits trace amounts of HAPs. The combination of all hazardous air contaminants is less than five tons per year.

Therefore, adverse impacts from toxic air contaminants are not expected to occur as a result of the new Facility.

6.1.5 Noise

The facility will increase the noise levels in the surrounding area. Any noise impacts associated with the new facility are not anticipated to have adverse effects.

6.1.6 Odor

Any odor impacts associated with construction and operation at the facility are not anticipated to have adverse effects on the local population.

6.2 SECONDARY IMPACTS

Secondary impacts are those air quality impacts caused indirectly by the proposed project. Induced social and economic growth, including increased air, land, and water traffic impacts are evaluated as part of PSD pre-construction review. This facility is a major new industrial facility, therefore some secondary impacts are anticipated.

6.2.1 Construction Impacts

The applicant described in their 1995 Final Environmental Impact Statement, expected local population growth. Modest population growth will be experienced during the initial construction period to nearly 4,000 people during peak construction. However, accommodations for most of the increase will be provided by a construction camp along Seven Mile Creek. The emissions associated with this camp and their contributions to air pollutant concentrations in the area are incorporated in the construction phase air quality impact analysis described in ambient modeling during construction.

6.2.2 Induced Growth

During the operation phase of the facility, a long-term incremental increase over present population is estimated at 600 people. This accounts for direct employment at the facility and indirect employment of local businesses to accommodate workers.

Increased emissions of air pollutants that will result from the additional population associated with the facility are higher vehicular traffic counts, increased airport activity, and additional space heating and electrical generation requirements for the local area. The applicant assumed in the model assessment that the air contaminant increase would be linear with respect to the population increase.

The PSD increment analysis discussed in Section 5, used volume sources of SO_2, NO_X, and PM_{10} to represent emissions from the City of Valdez and Airport Road. Changes in these emissions, since the PSD baseline dates, were assumed to be proportional to the change in Valdez area population from the baseline dates to the year 2007 (the anticipated full-capacity operation for the facility). An IGM model was run to include the increases in emissions caused by facility impacts.

The predicted concentrations are far below the applicable PSD increment ceilings, and when added to the maximum existing concentrations recording during the VAMS monitoring program, the resulting total concentrations are well below the applicable NAAQS. Therefore, the Department concurs with the applicant's modeling and the facility will not have a significant effect on local air quality.

6.3 MITIGATION PROCEDURES

Mitigating procedures to prevent significant primary or secondary air quality impacts should not be necessary, provided the facility is operated within the emission limits established by the BACT analysis and set out in the Air Quality Control Permit to Operate.

6.3.1 Ice Fog

Since the proposed project is in an area prevailing where meteorological conditions would inhibit the formation of ice fog, the Department has not evaluated control technology for potential ice fog impacts.

6.3.2 Other

The terms and conditions of the permit do not preclude any action by the State, EPA, or the Federal Land Manager to mitigate any material violation of the permit, or the mitigation of any secondary effect from the emissions of the facility. The applicant has submitted sufficient information in support of the permit application for the Department to make a determination that the new facility will comply with the provisions of 18 AAC 50.315(e).

7.0 CONCLUSIONS

The proposed construction and operation of this facility is subject to pre-construction review under Alaska Air Quality Control Regulations and the Federal Clean Air Act. The review requires an ambient impact assessment, a Best Available Control Technology (BACT) determination, and a determination that the facility with associated growth will not adversely affect air quality related values.

The estimated allowable emissions from this facility are 4,070 tons per year of NO_X, 711 tons per year of SO_2, 452 tons per year of PM_{10}, 1,999 tons per year of CO, and 411 tons per year of VOC. The emission increases, due to facility construction and operation, are greater than the Prevention of Significant Deterioration applicability thresholds listed in 18 AAC 50.300(c)(3); therefore, the Department is required to assess the best available control technology for NO_X, SO_2, PM_{10}, CO, and VOC.

The applicant has shown that the NO_X, SO_2, PM_{10}, CO, and VOC emissions due to their planned activities and associated growth will not cause or contribute to a violation of the ambient air quality standards provided in 18 AAC 50.010, or the increments provided in 18 AAC 50.020. The Department believes the applicant fully complies with the requirements of 18 AAC 50.310.

At a minimum, BACT must ensure compliance with Federal New Source Performance Standards (NSPS) in 40 CFR, Part 60. The thirty turbines are subject to NSPS Subpart GG. The facility

must comply with the requirements of the VOC fugitive emission control listed in 40 CFR 60 (NSPS), Subpart KKK. The boiler is subject to NSPS Subpart Db and the duct burner is subject to Subpart Dc. The fuel oil storage tanks are subject to NSPS Subpart Kb. The applicant will comply with the applicable sulfur dioxide standard by burning distillate fuel of less than 0.50% fuel sulfur. NSPS standards do not apply to other equipment at the facility.

The Department has determined BACT for the facility in Table 7-1.

Table 7-1
(Emission Limits)

Source	NO_X	SO_2	CO	PM_{10}	VOC
Turbines	Low NO_X Combustors (25 ppmv[2,A]) (125 ppmv[2,B])	NG[A] 0.25%S diesel[B]	Operate per design	Operate per design	Operate per design
Incinerator	Operate per design	No controls	Operate per design	Venturi scrubber	Operate per design
Boiler, duct burner, heaters	Low NO_X Burners	NG[A] 0.25%S diesel[B]	Operate per design	Operate per design	Operate per design
diesel engines	Operate per design	0.25%S diesel[A]	Operate per design	Operate per design	Operate per design
flares	No controls	No controls	Operate per design	Operate per design	Operate per design
marine boilers	No controls	NG/3.5% S fuel oil max. 15% load	Operate per design	Operate per design	Operate per design
fugitive emissions	n/a	n/a	n/a	n/a	Flares Leak detection and repair

[A] Primary Fuel [1] NSPS limit [2] BACT limit [3] AAC limit
[B] Backup Fuel

No expected identified impairment of visibility within Class I areas and integral vistas identified in 18 AAC 50.025(a) and 50.015(c) or within the Class II areas due to the facility construction.

No adverse secondary impacts or associated impacts are expected to occur. Emission impacts to the lands and waters are expected to be negligible due to the new facility construction and operation. No impairment of visibility is expected within Class I areas and integral vistas identified in 18 AAC 50.015(c)(2) and (c) due to the facility's construction or operation. The Department evaluated additional environmental impacts from the construction and operation of the facility equipment to identify any significant primary or secondary impacts caused by the facility.

8.0 REFERENCES

ADEC, 1996. Alyeska Pipeline Service Company, Technical Analysis Report. April 14.

ADGC, 1988. Letter from DGC to YPC permitting project phasing on January 20.

18 AAC 50. Air Quality Control Regulations. Alaska Department of Environmental Conservation. January 18, 1997.

40 CFR Part 50. National Primary and Secondary Ambient Air Quality Standards. Office of Federal Register National Archives and Records Administration. July 1995.

40 CFR Part 52 Subparts A & C. Approval and Promulgation of Implementation Plans. Subpart A--General Provisions, Subpart C-Alaska. Office of Federal Register National Archives and Records Administration. July 1995.

40 CFR Part 60, Subparts A, Db and Dc, KKK, GG, Kb. July 1995

40 CFR Part 6!, Subparts A, E. July 1995.

EPA 1978. Control Techniques for Nitrogen Oxides Emissions from Stationary sources. Second edition. EPA-450/1-78-001. Office of Air Quality Planning and Standards, Research Triangle Park, North Carolina, July.

EPA 1980. Prevention of Significant Deterioration Regulations.

EPA 1984. Sulfur Dioxide Technology Update Report. EPA-450/3-82-007. Office of Air Quality Planning and Standards, Research Triangle Park, North Carolina, March.

EPA 1987. Ambient Monitoring Guidelines for Prevention of Significant Deterioration.

EPA 1988. Workbook for Plume Visual Impact Screening and Analysis.

EPA 1989. Analysis of State and Federal Sulfur Dioxide Emission Regulations for Combustion Sources (Revised). EPA-450/2-89-014. Office of Air Quality Planning and Standards, Research Triangle Park, North Carolina, September.

EPA 1990. Draft Top Down Best Available Control Technology Guidance Document. Office of Air Quality Planning and Standards, Research Triangle Park, North Carolina, March.

EPA 1990. Draft New Source Review Workshop Manual: Prevention of Significant Deterioration and Nonattainment Area Permitting. Office of Air Quality Planning and Standards, Research Triangle Park, North Carolina, October.

EPA 1991. Source book: NO_X Control Technology Data. EPA-600/2-91-02. Control Technology Center, Research Triangle Park, North Carolina, July.

EPA 1992. Summary of NO_X Control Technologies and their Availability and Extent of Application. EPA-450/3-92-004, February.

EPA 1992. Screening Procedures for Estimating the Air Quality Impact of Stationary Sources (Revised), EPA-454/R-92-019, October.

EPA 1993. Alternative Control Techniques Document--NO_X Emissions from Stationary Gas Turbines, EPA-453/R-93-007, January.

EPA 1993. Alternative Control Techniques Document--NO_X Emission from Process Heaters (Revised), EPA-453/R-93-034, September.

EPA 1994. Alternative Control Techniques Document--NO_X Emissions from Industrial/Commercial/Institutional (ICI) Boilers, EPA-453/R-94-022, March.

EPA 1995. Compilation of Air Pollution Emission Factors. Fifth edition. EPA AP-42. Office of Air Quality Planning and Standards, Research Triangle Park, North Carolina, January.

EPA 1995. Guideline on Air Quality Models (Revised).

EPA 1995. User's Guide for the Industrial Source Complex (ISC3) Dispersion Models; Volume I.

EPA 1996. BACT/RACT/LAER Clearinghouse: electronic access.

EPA 1996a. Telephone conference between J. Baumgartner (ADEC), and R. Nye (EPA), on June 27 written notes as an E-mail to A. Bohn from J. Baumgartner, June 27.

EPA 1997. Telephone conversation C. Hudson, ADEC, and J. Keenan, EPA, about NSPS Db on April 7.

YPC 1996. SECOR International, Inc., Application for Air Quality Control Permit to Operate with PSD Review for the Proposed Anderson Bay Liquefied Natural Gas Plant and Marine Terminal submitted by Yukon Pacific Company Limited Partnership, August 1996.

YPC 1996b. Supplemental application information from W. Whitmore (YPC), to A. Bohn (ADEC), October 1.

YPC 1997. Supplemental Information from YPC to ADEC. March 27.

Makansi, J., 1988. Reducing NO_x Emissions. Power. September.

Bolz, R., and Tuve G., CRC Handbook of Tables for Applied Engineering Science, Second Edition. CRC Press, Boca Raton, FL, 1973.
Hartman, C., and Johnson, P., 1984. Environmental Atlas of Alaska, University of Alaska, Fairbanks, Alaska.

Smith, A.E., and Levenson, J.B., 1980. A Screening Procedure for the Impacts of Air Pollution Sources on Plants, Soils, and Animals. Argonne National Laboratory, Argonne Illinois. 48 pp, plus appendices. December.

Kohut, R.J., Amundson, R.G., Laurence, J.A., and McCune, D.C., 1990. Assessment of the effects of Air Quality on Arctic Tundra Vegetation at Prudhoe Bay, Alaska. Annual Report, 1990. Boyce Thompson Institute for Seafood Processing Facility Research, Cornell University, Ithaca, N.Y.

Kohut, R.J., Anumdson, R.G., and Laurence, J.A., 1991. Assessment of the effects of Air Quality on Arctic Tundra Vegetation at Prudhoe Bay, Alaska. Annual Report, 1991. Boyce Thompson Institute for Plant Research, Cornell University, Ithaca, N.Y.

Hill, A.C., and Bennet, J.H. "Inhibition of apparent photosynthesis by nitrogen oxides." Atmospheric Environment 4:341-348, 1970.

Capron, T.M., and Mansfield, T.A. "Inhibition of net photosynthesis in tomato in air polluted with NO and NO_2." Journal of Experimental Biology, 27:1181-1186, 1976.

Smith, *Air Pollution and Forests*. School of Forestry and Environmental Studies, Yale University, New Haven, Connecticut. 1981.

U.S. Department of Agriculture, Soil Conservation Service (1979). Exploratory Soil Survey of Alaska.

YPC 1997. Telephone conversation regarding diesel storage tanks between C. Hudson, DEC, and W. Whitmore, YPC, on March 19.

APPENDIX A
ALLOWABLE EMISSION CALCULATIONS

SAMPLE CALCULATIONS

GE Frame 5 Model 5382(c), rated 363.4 MMBtu/hr, turbine

NO_x emission factor (natural gas only) = 0.102 lb NO_x/MMBtu
Continuous Rated Capacity = 363.4 MMBtu/hr
Additional Rated Capacity = 42,600 hp
Assumed annual load = 8,760 hrs/yr

	Emission Factor	Heat Input	Annual Operating	Conversion Factor
Allowable Emissions =	(0.102 lb NOx/MMBtu *	363.4 MMBtu/hr*	8760hrs/yr*	(1 ton/2000 lb) =
	162.35 tons/year			

	Emission Factor	Heat Input	Conversion Factor	Conversion Factor
	(0.102 lb NOx/MMBtu *	363.4 MMBtu/hr*	1 hr/3600sec *	(453.6 g/lb)
	4.67 g/sec			

SO_2 emission factor (natural gas only) = 0.0008 lb/MMBtu
PM_{10} emission factor (natural gas only) = 0.0069 lb/MMBtu
CO emission factor (natural gas only) = 0.041 lb/MMBtu
VOC emission factor (natural gas only) = 0.002 lb/MMBtu

AIR CONTAMINANT EMISSION LIMITS AND ESTIMATES

B. Oxides of Nitrogen

Unit ID/Description	Emission Rate or Limit	Estimated Potential Annual Emissions (tpy)
Group Ia - Natural Gas-fired Turbines		
1, 2, 3, 4 - General Electric Frame 5 8, 9, 10, 11 15, 16, 17, 18 22, 23, 24, 25	25 ppmvd @15% O_2	2593.6 tpy
5, 12, 19, 26 - EGT Typhoon turbines 33, 34, 35	25 ppmvd @15% O_2	158.2 tpy
40, 41, 42, - Caterpillar-Solar Mars 90 43, 44	25 ppmvd @15% O_2	235.5 tpy
Group II - Gas-Fired Heaters		
6, 13, 20, 27 - Drier Reactivation heater	140.0 lb/mmcf	42.0 tpy
Group III - Diesel-Fired Equipment Internal-Combustion Engines[1]		
45 - Fresh Firewater Pump	0.031 lb/hp-hr (AP-42)	n/a
46 - Sea Firewater Pump	0.024 lb/hp-hr	(AP-42) n/a
47 - Sea Firewater Pump	0.024 lb/hp-hr (AP-42)	n/a
48 - Air Compressor	0.031 lb/hp-hr (AP-42)	n/a

[1] Standby diesel engines because of there emergency nature not included in the allowable emissions.

ALLOWABLE EMISSIONS (FACTORS DETERMINED FROM SOURCE TEST, VENDOR DATA, AND AP-42)

	Process Trains A, B, C, D [1]					Dual fired Equipment														
Source # / Description / Model #	1,2,3,4,8,9,10,11	5,12,19,26	6, 13, 20, 27	7, 14, 21, 28	40, 41, 42	36	36	36a, 39	39	36b		29,30	31, 32	31, 32	37	37	45	46, 47	44
	15,16,17,18,23	33,34,35	Drier	Dry Process	43, 44	Steam	Steam	Caterpillar	Caterpillar	Duct Burner		Marine or	LNG tanker	LNG tanker	Fluidized	Fluidized	Fresh	Sea	Air
	23,24,25		Reactivation	Flare	Caterpillar	Package	Package	Solar-Mars	Solar-Mars			Wet	Berth #1,2	Berth #1,2	bed	bed	Firewater	Firewater	Compressor[2]
	GE Frame 5M	EGT Typhoon	Heater		Solar-Mars	Boiler	Boiler	90 T 12000	90 T 12000			Flare			Incinerator	Incinerator	Pump[2]	Pump[2]	
	5382(c) turbine	turbine			90 T 12000														
Number units	18	7	4	4	3	1	1	1	1	1		2	2		1	1	1	2	1
Typical fuel[1]	NG	NG	NG	NG	NG	NG	Diesel	NG	diesel	diesel	NG	diesel	NG	NG	fuel oil	various[1]	various[1]	diesel	diesel
Continous Rated Capacity (CRC)	363.4	51.73	17.963	46.8	9,829	164	164	9,829	9,114	9,189	88.5	88.5	100	58	58	25	974	470	1,660	250
-CRC units	MMBtu/hr	MMBtu/hr	MMBtu/hr	MMBtu/hr	kw	MMBtu/hr	MMBtu/hr	kw	kw	kw	MMBtu/hr	MMBtu/hr	lb/hr	MMBtu/hr	MMBtu/hr	lb/hr	lb/hr	hp	hp	hp
Additional information	42,600	6,900	n/a	2,476	10,935	n/a	n/a	10,935	11,028	10,918	n/a	n/a	1,880	49	60	999	999	n/a	25%	n/a
-units	hp	hp	n/a	lb/hr	BTU/kwh	n/a	n/a	BTU/kwh	BTU/kwh	BTU/kwh	n/a	n/a	MMBtu/hr	MMBtu/hr	gal/hr	lb/hr	lb/hr	n/a	fuel sul/hr	n/a
								107,480,115	100,509,192											
Assumed Annual Load	100%	100%	100%	100%	100%	14.1%	14.1%	100%	100%	100%	100%	100%	100%	100%	100%	100%	100%	100%	100%
Equivalent hrs/yr/unit	8,760	8760	8760	8760	8760	8760	8760	8760	8760	8760	8760	8760	8760	8760	8760	8760	8760	8760	4350.00
heat value of fuel	0	0	1,050	8,722,025	0	1,000	137,000		137,000	137,000		137,000	18,500					137,000	137,000	137,000
-units of heat value			BTU/CF	kter/hr		BTU/CF	BTU/gal		BTU/gal	BTU/gal		BTU/gal	BTU/lb LHV					BTU/gal	BTU/gal	BTU/gal
NO_x ER annual emission factor	0.102	0.100	140.00	0.068	0.10	81	20	0.10	3,193.16	0.52	0.10	20	0.068	0.44	38.40	1.70	5.02	0.031	0.024	0.031
-emission factor units	lb/MMBtu	lb/MMBtu	lb/mmcf	lb/MMBtu	lb/MMBtu	lb/10^6 cf	lb/10^3 gal	lb/MMBtu		lb/MMBtu	lb/MMBtu	lb/10^3 gal	lb/MMBtu	lb/MMBtu	lb/10^3 gal	lbs/ton feed	lbs/ton feed	lb/hp-hr	lb/hp-hr	lb/hp-hr
Emission factor given by	Manufacturer	Manufacturer	AP-42	AP-42	Manufacturer	AP-42	AP-42	Manufacturer		Manufacturer	Manufacturer	AP-42	AP-42	AP-42	AP-42	AP-42	AP-42	AP-42	AP-42	AP-42
NO_x TPY[1]	162.35	22.66	10.49	14.46	47.08	8.2039	14.7659	47.08		226.00	38.76	86.5883	0.56	94.43	9.67	0.09	10.71	63.82	174.50	16.97
NO_x check g/sec[1]	4.670	0.662	0.302	0.416	1.354	1.674	0.425	1.354		6.501	1.115	1.628	0.016	2.717	0.278	0.003	0.308	1.836	5.020	0.488
gram/sec														2.992		0.31				
SO_2 Emission factor	0.00080	0.00075	0.6	0.00001	0.0008	0.6	35.5	0.0008		0.2800	0.0007	35.5	0.00001	0.000001	558.50	18.00	3.90	0.00205	0.00220	0.00205
-emission factor units	lb/MMBtu	lb/MMBtu	lb/mmcf	lb/MMBtu	lb/MMBtu	lb/10^6 cf	lb/10^3 gal	lb/MMBtu		lb/MMBtu	lb/MMBtu	lb/10^3 gal	lb/MMBtu	lb/MMBtu	lb/10^3 gal	lbs/ton feed	lbs/ton feed	lb/hp-hr	lb/hp-hr	lb/hp-hr
	Manufacturer	Manufacturer	AP-42	AP-42	Manufacturer	AP-42	AP-42	Manufacturer		Manufacturer	Manufacturer	AP-42	AP-42	AP-42	AP-42	AP-42	AP-42	AP-42	AP-42	AP-42
SO_2 TPY[1]	1.3	0.2	0.045	0.0	0.38	0.0508	26.2449	0.38		123.04	0.271	100.4443	0.0	0.00	144.25	0.99	8.32	4.22	16.00	1.12
SO_2 check g/sec[1]	0.037	0.005	0.0013	0.000	0.011	0.012	0.755	0.011		3.539	0.008	2.889	0.000	0.000	4.21	0.028	0.239	0.121	0.460	0.0323
gram/sec														4.21		0.27				
PM_{10} annual ER	0.0069	0.0116	13.7	40	0.0195	2.0	2.0	0.0195		0.0379	0.0050	2.0	40.0000	0.0419	10.00	0.44	0.94	0.00220	0.05730	0.00220
-emission factor units	lb/MMBtu	lb/MMBtu	lb/mmcf	ug/l	lb/MMBtu	lb/10^6 cf	lb/10^3 gal	lb/MMBtu		lb/MMBtu	lb/MMBtu	lb/10^3 gal	ug/m^3	lb/MMBtu	lb/10^3 gal	lbs/ton feed	lbs/ton feed	lb/hp-hr	lb/MMBtu	lb/hp-hr
	Manufacturer	Manufacturer	AP-42	AP-42	Manufacturer	AP-42	AP-42	Manufacturer		Manufacturer	Manufacturer	AP-42	AP-42	AP-42	AP-42	AP-42	AP-42	AP-42	AP-42	AP-42
PM_{10} TPY[1]	10.98	2.63	1.0	33.7	9.18	0.2026	1.4786	9.18		16.65	1.938	5.6588	0.00	0.99	2.63	0.02	2.00	4.63	1.11	1.20
PM_{10} check g/sec[1]	0.316	0.076	0.030	0.097	0.264	0.041	0.043	0.264		0.479	0.056	0.163	0.00	0.289	0.076	0.001	0.057	0.130	0.032	0.035
gram/sec														0.33		0.06				
CO max ER	0.041	0.061	33.000	0.370	0.1220	40.000	5.000	0.1220		0.1256	0.0600	5.000	0.370	0.11	0.00	2.100	1.920	0.00668	0.00329	0.00668
-emission factor units	lb/MMBtu	lb/MMBtu	lb/mmcf	lb/MMBtu	lb/MMBtu	lb/10^6 cf	lb/10^3 gal	lb/MMBtu		lb/MMBtu	lb/MMBtu	lb/10^3 gal	lb/MMBtu	lb/MMBtu	lb/10^3 gal	lbs/ton feed	lbs/ton feed	lb/hp-hr	lb/hp-hr	lb/hp-hr
	Manufacturer	Manufacturer	AP-42	AP-42	Manufacturer	AP-42	AP-42	Manufacturer		Manufacturer	Manufacturer	AP-42	AP-42	AP-42	AP-42	AP-42	AP-42	AP-42	AP-42	AP-42
CO TPY[1]	65.26	13.82	2.62	78.76	67.43	4.05	3.70	67.43		86.18	31.010	14.15	3.08	23.61	0.00000	0.11	4.10	13.75	38.46	3.66
CO check g/sec[1]	1.877	0.398	0.075	2.27	1.882	0.027	0.106	1.882		1.587	0.892	0.407	0.088	0.679	0.000	0.003	0.118	0.396	1.106	0.105
gram/sec														0.68		0.12				
VOC ER	0.002	0.019	2.784	0.063	0.00350	1.411	0.200	0.00350		0.03607	0.0020	0.200	0.063	0.024	3.20		3.200	0.00247	0.00073	0.00247
-emission factor units	lb/MMBtu	lb/MMBtu	lb/mmcf	lb/MMBtu	lb/MMBtu	lb/10^6 cf	lb/10^3 gal	lb/MMBtu		lb/MMBtu	lb/MMBtu	lb/10^3 gal	lb/MMBtu	lb/MMBtu	lb/10^3 gal		lbs/ton feed	lb/hp-hr	lb/hp-hr	lb/hp-hr
	Manufacturer	Manufacturer	AP-42	AP-42	Manufacturer	AP-42	AP-42	Manufacturer		Manufacturer	Manufacturer	AP-42	AP-42	AP-42	AP-42		AP-42	AP-42	AP-42	AP-42
VOC TPY[1]	3.18	4.30	0.21	13.41	1.65	0.14	0.16	1.65		18.86	0.776	0.87	0.62	6.16	0.84094		7.00	5.08	6.29	1.35
VOC check g/sec[1]	0.092	0.124	0.006	0.386	0.0474	0.025	0.0043	0.0474		0.4860	0.022	0.0163	0.016	0.148	0.024		0.201	0.146	0.152	0.035

Notes:

[1] Fuel burned in source, NG-natural gas, diesel, various fuel contains 25 lb/hr biological sludge including spent solvents and oils and 974 lb/hr on non sludge solids. The non sludge solids are general construction, garbage, shipping materiae

[2] The modeled operating scenerio is the operation that yields the highest emissions, the fresh firewater pump running continuously and one sea firewater pumps and the compressor in not operating.

[1] Calculated number see sample calculations section in TAR

AIR CONTAMINANT EMISSION LIMITS AND ESTIMATES
(continued)

Group IV - Dual Fuel-fired Equipment

A. Steam Generating Boiler

36 Package Boiler	81 lb/mmcf on natural gas 20 lb/1000 gallons diesel	
38a Caterpillar-Solar Mars 90	25 ppmvd @15% O_2, natural gas	525 tpy
39 Caterpillar-Solar Mars 90	25 ppmvd @15% O_2, natural gas	combined
38a Caterpillar-Solar Mars 90	125 ppmvd @15% O_2, diesel fuel	
39 Caterpillar-Solar Mars 90	125 ppmvd @15% O_2, diesel fuel	

B. Duct Burner on Dual-fired turbine

38b Duct Burner	0.1 lb/MMBtu on natural gas	see A.
Caterpillar-Solar Mars 90	20 LB/1000 gallon on diesel fuel	above

Group V - Incinerator

N/A Fluidized Bed Incinerator	1.70 lbs/ton feed (AP-42)-sludge 5.02 lbs/ton feed (AP-42)-nonsludge	10.8

Group VI - Flares

7 - Dry Process Flare Pilot	0.068 lb/MMBtu	14.6
14 - Dry Process Flare Pilot	0.068 lb/MMBtu	14.6
21 - Dry Process Flare Pilot	0.068 lb/MMBtu	14.6
28 - Dry Process Flare Pilot	0.068 lb/MMBtu	14.6
29 - Marine Flare Pilot	0.068 lb/MMBtu	0.6
30 - Wet Process Flare Pilot	0.068 lb/MMBtu	0.6
Main Production Facility Allowable NO_x Subtotal		**3,624.7 tpy**
Construction Allowable NO_x Subtotal (Year 0-5)		**1,083.6 tpy**
Construction Allowable (Years 6-8)*		**3,154.5 tpy**

* Construction Allowable Years 6-8 includes operating emissions

AIR CONTAMINANT EMISSION LIMITS AND ESTIMATES
(continued)

B. Sulfur Dioxide

Unit ID/Description	Emission Rate or Limit	Estimated Potential Annual Emissions (tpy)
Group Ia - Natural Gas-fired Turbines		
1, 2, 3, 4 - General Electric Frame 5 8, 9, 10, 11 15, 16, 17, 18 22, 23, 24, 25	Natural Gas with less than 4 ppm hydrogen sulfide	20.8 tpy
5, 12, 19, 26 - EGT Typhoon turbines 33, 34, 35	Natural Gas with less than 4 ppm hydrogen sulfide	1.4 tpy
40, 41, 42, - Caterpillar-Solar Mars 90 43, 44	Natural Gas with less than 4 ppm hydrogen sulfide	2.0 tpy
Group II - Gas-Fired Heaters		
6 Drier Reactivation heater	4 ppm hydrogen sulfide	
13 Drier Reactivation heater	4 ppm hydrogen sulfide	
20 Drier Reactivation heater	4 ppm hydrogen sulfide	
27 Drier Reactivation heater	4 ppm hydrogen sulfide	
Group III - Diesel-Fired Equipment Internal-Combustion Engines[1]		
45 Fresh Firewater Pump	0.002 lb/hp-hr (AP-42)	n/a
46 Sea Firewater Pump	0.002 lb/hp-hr (AP-42)	n/a
47 Sea Firewater Pump	0.002 lb/hp-hr (AP-42)	n/a
48 Air Compressor	0.002 lb/hp-hr (AP-42)	n/a

[1] Standby diesel engines because of there emergency nature not included in the allowable emissions.

AIR CONTAMINANT EMISSION LIMITS AND ESTIMATES
(Continued)

Group IV - Dual Fuel-fired Equipment

A. Steam Generating Boiler

36 - Package Boiler	0.6 lb/mmcf on natural gas 35.5 lb/1000 gallons diesel	
38a, 39 - Caterpillar-Solar Mars 90 38a, 39 - Caterpillar-Solar Mars 90	natural gas, 4 ppm hydrogen sulfide diesel fuel, 0.25% by weight	367 tpy combined

B. Duct Burner on Dual-fired turbine

38b	Natural gas, 4 ppm hydrogen sulfide diesel fuel, 0.25% by weight	see A. above

Group V - Incinerator

N/A - Fluidized Bed Incinerator	0.80 lbs/ton feed (AP-42)-sludge 3.90 lbs/ton feed (AP-42)-nonsludge	 9.4

Group VI - Flares

7 - Dry Process Flare Pilot	Trace
14 - Dry Process Flare Pilot	Trace
21 - Dry Process Flare Pilot	Trace
28 - Dry Process Flare Pilot	Trace
29 - Marine Flare Pilot	Trace
30 - Wet Process Flare Pilot	Trace
Main Production Facility Allowable SO_2 Subtotal	**400.6 tpy**
Construction Allowable SO_2 Subtotal (Year 0-5)	**104.5 tpy**
Construction Allowable SO_2 Subtotal (Year 6-8)*	**754.4 tpy**

* Construction Allowable Years 6-8 includes operating emissions

AIR CONTAMINANT EMISSION LIMITS AND ESTIMATES
(Continued)

C. Carbon Monoxide

Unit ID/Description	Emission Rate or Limit	Estimated Potential Annual Emissions (tpy)
1, 2, 3, 4 - General Electric Frame 5 8, 9, 10, 11 15, 16, 17, 18 22, 23, 24, 25	15 ppmvd @15% O_2	1051.2 tpy
5, 12, 19, 26 - EGT Typhoon turbines 33, 34, 35	25 ppmvd @15% O_2	96.6 tpy
40, 41, 42, - Caterpillar-Solar Mars 90 43, 44	50 ppmvd @15% O_2	287.0 tpy
Group II - Gas-Fired Heaters		
6, 13, 20, 27 - Drier Reactivation heater	35 lb/mmcf	10.4 tpy
Group III - Diesel-Fired Equipment Internal-Combustion Engines[1]		
45 - Fresh Firewater Pump		n/a
46 - Sea Firewater Pump		n/a
47 - Sea Firewater Pump		n/a
48 - Air Compressor		n/a

[1] Standby diesel engines because of there emergency nature not included in the allowable emissions.

AIR CONTAMINANT EMISSION LIMITS AND ESTIMATES (Continued)

Group IV - Dual Fuel-fired Equipment

A. Steam Generating Boiler

36 - Package Boiler		
38a - Caterpillar-Solar Mars 90	50 ppmvd @15% O_2	175 tpy
39 - Caterpillar-Solar Mars 90	50 ppmvd @15% O_2	combined

B. Heat Recovery Steam Generator on Dual-fired turbine

38b - Duct burner	see A above

Group V - Incinerator

N/A - Fluidized Bed Incinerator	4.3

Group VI - Flares

7 - Dry Process Flare Pilot	78.9
14 - Dry Process Flare Pilot	78.9
21 - Dry Process Flare Pilot	78.9
28 - Dry Process Flare Pilot	78.9
29 - Marine Flare Pilot	3.1
30 - Wet Process Flare Pilot	3.1
Main Production Facility Allowable CO Subtotal	**1,946.3 tpy**
Construction Allowable CO Subtotal (Year 0-5)	**1,464.0 tpy**
Construction Allowable CO Subtital (Years 6-8)*	**2,378.3 tpy**

* Construction Allowable Years 6-8 includes operating emissions.

AIR CONTAMINANT EMISSION LIMITS AND ESTIMATES (Continued)

D. Particulate Matter 10 micrograms or less (PM-10)

Unit ID/Description	Emission Rate or Limit	Estimated Potential Annual Emissions (tpy)
1, 2, 3, 4 0 - General Electric Frame 5 8, 9, 10, 11 15, 16, 17, 18 22, 23, 24, 25	0.0069 lbs/MMBtu	176.0 tpy
5, 12, 19, 26 - EGT Typhoon turbines 33, 34, 35	0.012 lb/MMBtu	18.5 tpy
40, 41, 42, - Caterpillar-Solar Mars 90 43, 44	0.020 lb/MMBtu	46.0 tpy
Group II - Gas-Fired Heaters		
6, 13, 20, 27 - Drier Reactivation heater	1.0 tpy each	4.0 tpy
Group III - Diesel-Fired Equipment Internal-Combustion Engines[1]		
45 - Fresh Firewater Pump		n/a
46 - Sea Firewater Pump		n/a
47 - Sea Firewater Pump		n/a
48 - Air Compressor		n/a

[1] Standby diesel engines because of there emergency nature not included in the allowable emissions.

AIR CONTAMINANT EMISSION LIMITS AND ESTIMATES
(Continued)

Group IV - Dual Fuel-fired Equipment

A. Steam Generating Boiler

36 - Package Boiler		
38a - Caterpillar-Solar Mars 90	0.020 lb/MMBtu (natural gas)	41.0
39 - Caterpillar-Solar Mars 90	0.020 lb/MMBtu (natural gas)	combined
38a - Caterpillar-Solar Mars 90	16.6 tpy, diesel fuel	
39 - Caterpillar-Solar Mars 90	16.6 tpy, diesel fuel	

B. Duct Burner on Dual-fired turbine

38b	see A above

Group V - Incinerator

N/A - Fluidized Bed Incinerator	2.1

Group VI - Flares

7 - Dry Process Flare Pilot	33.7
14 - Dry Process Flare Pilot	33.7
21 - Dry Process Flare Pilot	33.7
28 - Dry Process Flare Pilot	33.7
29 - Marine Flare Pilot	0.3
30 - Wet Process Flare Pilot	0.3
Main Production Facility Allowable PM_{10} Subtotal	**423.0 tpy**
Construction Allowable PM_{10} Subtotal (Year 0-5)	**83.5 tpy**
Construction Allowable PM_{10} Subtotal (Years 6-8)*	**330.8 tpy**

* Construction Allowable Years 6-8 includes operating emissions

AIR CONTAMINANT EMISSION LIMITS AND ESTIMATES
(Continued)

E. Volatile Organic Compounds (VOC)

Unit ID/Description	Emission Rate or Limit	Estimated Potential Annual Emissions (tpy)
1, 2, 3, 4 - General Electric Frame 5 8, 9, 10, 11 15, 16, 17, 18 22, 23, 24, 25	3.5 tpy each	56.0 tpy
5, 12, 19, 26 - EGT Typhoon turbines 33, 34, 35	4.4 tpy each	30.8 tpy
40, 41, 42, - Caterpillar-Solar Mars 90 43, 44	1.7 tpy each	8.5 tpy
Group II - Gas-Fired Heaters		
6, 13, 20, 27 - Drier Reactivation heater		0.8 tpy
Group III - Diesel-Fired Equipment Internal-Combustion Engines[1]		
45 - Fresh Firewater Pump		n/a
46 - Sea Firewater Pump		n/a
47 - Sea Firewater Pump		n/a
48 - Air Compressor		n/a

[1] Standby diesel engines because of there emergency nature not included in the allowable emissions.

AIR CONTAMINANT EMISSION LIMITS AND ESTIMATES
(Continued)

Group IV - Dual Fuel-fired Equipment

A. Steam Generating Boiler	
36 - Package Boiler	32.0 tpy
38a - Caterpillar-Solar Mars 90	combined
39 - Caterpillar-Solar Mars 90	
B. Duct Burner on Dual-fired turbine	
38b - Duct Burner	see A above
Group V - Incinerator	
N/A - Fluidized Bed Incinerator	7.0
Group VI - Flares	
7 - Dry Process Flare Pilot	13.2
14 - Dry Process Flare Pilot	13.2
21 - Dry Process Flare Pilot	13.2
28 - Dry Process Flare Pilot	13.2
29 - Marine Flare Pilot	0.5
30 - Wet Process Flare Pilot	0.5
Group VII - Fugitive VOC Emissions	200.0
Main Production Facility Allowable PM_{10} Subtotal	**388.9 tpy**
Construction Allowable PM_{10} Subtotal (Year 0-5)	**130.3 tpy**
Construction Allowable PM_{10} Subtotal (Years 6-8)*	**431.9 tpy**

* Construction Allowable Years 6-8 includes operating emissions

TABLE A-1a (Page 1 of 2)

Estimated Annual Emissions of Five Pollutants During Construction of the Anderson Bay Facility

	Mobile Sources (hp-hr/yr)	PM10 (ton/year)	Sulfur dioxide (ton/year)	Nitrogen oxides (ton/year)	Carbon monoxide (ton/year)	VOC (ton/year)
Year 0						
Pnt Diesel Power Generation (Table A-3)		3.3	6.7	86.9	19.0	4.3
Pnt Solid Waste Incinerator (Table A-4)		0.0	0.0	0.0	0.0	0.0
Pnt LPG for Construction Camps (Table A-5)		0.0	0.0	0.0	0.0	0.0
Vol Diesel Site Clearing Equip. (Table A-6)	917,803	1.0	0.9	9.7	4.5	1.1
Vol Diesel Overburden Equip. (Table A-6)	888,879	0.7	0.9	9.5	3.2	0.9
Vol Diesel Rock Excavation Equip. (Table A-6)	1,959,907	2.0	2.0	21.6	10.0	2.2
Vol Diesel Support Equip. (Table A-6)	16,441,595	18.5	16.3	175.7	73.4	18.2
Vol Gasoline Support Equip. (Table A-6)	4,231,472	0.3	1.1	22.3	923.5	42.2
Vol Site Preparation PM10 Fugitives (Table A-7)		2.4	0.0	0.0	0.0	0.0
Total Emissions		**28.1**	**27.9**	**325.7**	**1,033.7**	**68.9**
Year 1						
Pnt Diesel Power Generation (Table A-3)		8.5	13.8	184.7	40.2	10.5
Pnt Solid Waste Incinerator (Table A-4)		0.0	0.0	0.0	0.0	0.0
Pnt LPG for Construction Camps (Table A-5)		0.1	0.4	4.5	0.8	0.1
Vol Diesel Site Clearing Equip. (Table A-6)	1,894,983	2.0	1.9	20.0	9.3	2.2
Vol Diesel Overburden Equip. (Table A-6)	5,603,801	4.5	5.6	59.7	20.3	5.7
Vol Diesel Rock Excavation Equip. (Table A-6)	9,146,234	9.4	9.2	100.9	46.7	10.1
Vol Diesel Support Equip. (Table A-6)	16,671,977	18.7	16.5	178.1	74.4	18.5
Vol Gasoline Support Equip. (Table A-6)	4,290,764	0.3	1.2	22.7	936.5	42.8
Vol Site Preparation PM10 Fugitives (Table A-7)		6.1	0.0	0.0	0.0	0.0
Total Emissions		**49.6**	**48.5**	**570.5**	**1,128.2**	**90.0**
Year 2						
Pnt Diesel Power Generation (Table A-3)		16.3	35.4	454.5	99.4	21.6
Pnt Solid Waste Incinerator (Table A-4)		1.5	12.9	7.3	3.4	5.6
Pnt LPG for Construction Camps (Table A-5)		0.4	0.9	11.5	1.9	0.3
Vol Diesel Site Clearing Equip. (Table A-6)	1,585,935	1.7	1.6	16.7	7.8	1.8
Vol Diesel Overburden Equip. (Table A-6)	7,922,616	6.4	7.9	84.4	28.8	8.1
Vol Diesel Rock Excavation Equip. (Table A-6)	27,700,023	28.6	27.8	305.7	141.4	30.7
Vol Diesel Support Equip. (Table A-6)	16,910,039	19.0	16.8	180.7	75.5	18.7
Vol Gasoline Support Equip. (Table A-6)	4,352,033	0.3	1.2	23.0	949.8	43.4
Vol Site Preparation PM10 Fugitives (Table A-7)		9.5	0.0	0.0	0.0	0.0
Total Emissions		**83.5**	**104.5**	**1,083.6**	**1,308.0**	**130.3**
Year 3						
Pnt Diesel Power Generation (Table A-3)		20.4	39.2	512.0	111.8	26.3
Pnt Solid Waste Incinerator (Table A-4)		1.5	12.9	7.3	3.4	5.6
Pnt LPG for Construction Camps (Table A-5)		0.6	1.6	19.1	3.2	0.5
Vol Diesel Site Clearing Equip. (Table A-6)	140,909	0.1	0.1	1.5	0.7	0.2
Vol Diesel Overburden Equip. (Table A-6)	5,024,098	4.0	5.0	53.5	18.2	5.1
Vol Diesel Rock Excavation Equip. (Table A-6)	24,564,171	25.3	24.7	271.1	125.3	27.3
Vol Diesel Support Equip. (Table A-6)	16,910,039	19.0	16.8	180.7	75.5	18.7
Vol Gasoline Support Equip. (Table A-6)	4,352,033	0.3	1.2	23.0	949.8	43.4
Vol Site Preparation PM10 Fugitives (Table A-7)		7.3	0.0	0.0	0.0	0.0
Total Emissions		**78.6**	**101.4**	**1,068.1**	**1,288.0**	**127.0**

TABLE A-1a (Page 2 of 2)

Estimated Annual Emissions of Five Pollutants During Construction of the Anderson Bay Facility

	Mobile Sources (hp-hr/yr)	PM10 (ton/year)	Sulfur dioxide (ton/year)	Nitrogen oxides (ton/year)	Carbon monoxide (ton/year)	VOC (ton/year)
Years 4 & 5						
Pnt Diesel Power Generation (Table A-3)		33.8	55.5	743.4	161.9	42.2
Pnt Solid Waste Incinerator (Table A-4)		1.9	16.3	9.2	4.3	7.0
Pnt LPG for Construction Camps (Table A-5)		0.7	1.9	22.9	3.9	0.6
Vol Diesel Support Equip. (Table A-6)	21,342,588	24.0	21.1	228.0	95.3	23.6
Vol Gasoline Support Equip. (Table A-6)	5,492,811	0.4	1.5	29.0	1,198.8	54.8
Vol Site Preparation PM10 Fugitives (Table A-7)		9.6	0.0	0.0	0.0	0.0
Total Emissions		**70.4**	**96.3**	**1,032.5**	**1,464.2**	**128.2**
Years 6, 7 & 8 - Construction Emissions						
Pnt Diesel Power Generation (Table A-3)		12.0	18.2	246.7	53.7	14.7
Pnt Solid Waste Incinerator (Table A-4)		1.9	16.3	9.2	4.3	7.0
Pnt LPG for Construction Camps (Table A-5)		0.5	1.3	15.3	2.6	0.4
Vol Diesel Support Equip. (Table A-6)	17,074,071	19.2	16.9	182.4	76.2	18.9
Vol Gasoline Support Equip. (Table A-6)	4,394,249	0.3	1.2	23.2	959.1	43.8
Vol Site Preparation PM10 Fugitives (Table A-7)		8.2	0.0	0.0	0.0	0.0
Subtotal		42.1	53.8	476.8	1,095.8	84.9
Years 6, 7 & 8 - Operations Emissions						
N/A Total facility emissions - 100% capacity, all units		451.3	711.4	4,069.9	1,998.7	410.4
N/A Less emissions from two LNG trains		(162.6)	(10.8)	(1,392.2)	(716.2)	(63.4)
Subtotal		288.7	700.6	2,677.7	1,282.5	347.0
Years 6, 7 & 8 - Total Emissions (Note 1)		**330.8**	**754.4**	**3,154.5**	**2,378.3**	**431.9**

	PM10	Sulfur dioxide	Nitrogen oxides	Carbon monoxide	VOC (Note 2)
Average Mobile Source Emission Factors (Tables A-6a & A-6b)					
Diesel Site Clearing Equip. (g/hp-hr)	0.95	0.89	9.56	4.47	1.04
Diesel Overburden Equip. (g/hp-hr)	0.73	0.91	9.66	3.29	0.93
Diesel Rock Excavation Equip. (g/hp-hr)	0.94	0.91	10.01	4.63	1.01
Diesel Support Equip. (g/hp-hr)	1.02	0.90	9.69	4.05	1.00
Gasoline Support Equip. (g/hp-hr)	0.06	0.25	4.79	198.00	9.05

Note 1: Construction and operations will coincide in years 6, 7 & 8. Emissions will include construction plus 2 of 4 LNG trains.
Note 2: VOC emissions based on non-methane/non-ethane factors where available; otherwise VOC emissions are THC emissions.

TABLE A-6

Estimated Diesel and Gasoline Use (hp-hr) for Site Earthwork and Construction Support Operations

Year 0

Description	May	Jun	Jul	Aug	Sep	Oct	Nov	Total
Site Clearing & Grubbing (acre)	7.3	7.3	8.9	8.9	8.9	8.9	7.5	57.9
Overburden Strip/Dispose (BCY)	5,000	10,000	25,000	40,000	20,000	10,000	5,000	115,000
Rock Excavate/Dispose/Fill (BCY	2,500	10,000	25,000	40,000	40,000	40,000	30,000	187,500
Shifts/Day-Hours/Shift	1-10	2-12	2-12	2-12	2-12	2-12	1-10	N/A
Site Clearing & Grubbing (hp-hr)	116,120	116,120	141,692	141,692	141,692	141,692	118,794	917,803
Overburden Strip/Dispose (hp-hr)	38,647	77,294	193,235	309,175	154,588	77,294	38,647	888,879
Rock Excavate/Dispose/Fill (hp-h	26,132	104,528	261,321	418,114	418,114	418,114	313,585	1,959,907
Diesel Support Equip. (hp-hr)	1,190,307	2,764,584	2,856,737	2,856,737	2,764,584	2,856,737	1,151,910	16,441,595
Gasoline Support Equip. (hp-hr)	306,342	711,504	735,221	735,221	711,504	735,221	296,460	4,231,472

Year 1

Description	May	Jun	Jul	Aug	Sep	Oct	Nov	Total
Site Clearing & Grubbing (acre)	10.6	17.1	17.1	21.6	21.6	16.1	15.4	119.6
Overburden Strip/Dispose (BCY)	25,000	75,000	150,000	150,000	150,000	100,000	75,000	725,000
Rock Excavate/Dispose/Fill (BCY	50,000	100,000	150,000	150,000	150,000	150,000	125,000	875,000
Shifts/Day-Hours/Shift	1-10	2-12	2-12	2-12	2-12	2-12	1-12	N/A
Site Clearing & Grubbing (hp-hr)	168,661	271,538	271,538	341,992	341,992	254,785	244,478	1,894,983
Overburden Strip/Dispose (hp-hr)	193,235	579,704	1,159,407	1,159,407	1,159,407	772,938	579,704	5,603,801
Rock Excavate/Dispose/Fill (hp-h	522,642	1,045,284	1,567,926	1,567,926	1,567,926	1,567,926	1,306,605	9,146,234
Diesel Support Equip. (hp-hr)	1,190,307	2,764,584	2,856,737	2,856,737	2,764,584	2,856,737	1,382,292	16,671,977
Gasoline Support Equip. (hp-hr)	306,342	711,504	735,221	735,221	711,504	735,221	355,752	4,290,764

Year 2

Description	May	Jun	Jul	Aug	Sep	Oct	Nov	Total
Site Clearing & Grubbing (acre)	14.2	19.7	15.3	19.7	13.3	8.9	8.9	100.1
Overburden Strip/Dispose (BCY)	25,000	100,000	250,000	250,000	200,000	150,000	50,000	1,025,000
Rock Excavate/Dispose/Fill (BCY	150,000	300,000	500,000	500,000	500,000	400,000	300,000	2,650,000
Shifts/Day-Hours/Shift	1-12	2-12	2-12	2-12	2-12	2-12	1-12	N/A
Site Clearing & Grubbing (hp-hr)	224,750	312,819	242,364	312,819	211,364	140,909	140,909	1,585,935
Overburden Strip/Dispose (hp-hr)	193,235	772,938	1,932,345	1,932,345	1,545,876	1,159,407	386,469	7,922,616
Rock Excavate/Dispose/Fill (hp-h	1,567,926	3,135,852	5,226,419	5,226,419	5,226,419	4,181,136	3,135,852	27,700,023
Diesel Support Equip. (hp-hr)	1,428,368	2,764,584	2,856,737	2,856,737	2,764,584	2,856,737	1,382,292	16,910,039
Gasoline Support Equip. (hp-hr)	367,610	711,504	735,221	735,221	711,504	735,221	355,752	4,352,033

Year 3

Description	May	Jun	Jul	Aug	Sep	Oct	Nov	Total
Site Clearing & Grubbing (acre)	4.4	4.4	0.0	0.0	0.0	0.0	0.0	8.9
Overburden Strip/Dispose (BCY)	25,000	150,000	200,000	200,000	75,000	0	0	650,000
Rock Excavate/Dispose/Fill (BCY	150,000	300,000	450,000	450,000	450,000	350,000	200,000	2,350,000
Shifts/Day-Hours/Shift	1-12	2-12	2-12	2-12	2-12	2-12	1-12	N/A
Site Clearing & Grubbing (hp-hr)	70,455	70,455	0	0	0	0	0	140,909
Overburden Strip/Dispose (hp-hr)	193,235	1,159,407	1,545,876	1,545,876	579,704	0	0	5,024,098
Rock Excavate/Dispose/Fill (hp-h	1,567,926	3,135,852	4,703,778	4,703,778	4,703,778	3,658,494	2,090,568	24,564,171
Diesel Support Equip. (hp-hr)	1,428,368	2,764,584	2,856,737	2,856,737	2,764,584	2,856,737	1,382,292	16,910,039
Gasoline Support Equip. (hp-hr)	367,610	711,504	735,221	735,221	711,504	735,221	355,752	4,352,033

Years 4 and 5 (Note 1)

Description	May-Nov	Dec-Apr	Total
Shifts/Day-Hours/Shift	2-12	1-12	N/A
Diesel Support Equip. (hp-hr/mo)	2,253,794	1,113,206	21,342,588
Gasoline Support Equip. (hp-hr/m	580,045	286,499	5,492,811

Years 6, 7 and 8 (Note 2)

Description	May-Nov	Dec-Apr	Total
Shifts/Day-Hours/Shift	2-12	1-12	N/A
Diesel Eq. (hp-hr/mo)	1,803,035	890,565	17,074,071
Gasoline Eq. (hp-hr/mo)	464,036	229,199	4,394,249

Note 1: 20% support equipment reduction from year 3.

Note 2: 20% support equipment reduction from years 4 & 5.

TABLE A-7

Estimated Site Preparation Fugitive Dust Emissions from Trafficking and Concrete Batch Plant Operations

		Year 0	Year 1	Year 2	Year 3	Years 4 & 5	Years 6, 7 & 8
Acres disturbed (Table A-6a)							
Annual	acres-mo/yr	136.4	354.5	458.7	295.8	343.9	260.9
Peak	acres-mo	19.5	49.7	69.3	40.9	28.7	21.7
Concrete batch plant 1 (Volume area 1)							
Days of operation	Days/yr	0	0	153	214	365	365
Average production	Cu.Yds/day	0	0	75	75	75	75
Peak production	Cu.Yds/day	0	0	600	600	600	600
Concrete batch plant 2 (Volume area 4)							
Days of operation	Days/yr	0	0	153	214	365	365
Average production	Cu.Yds/day	0	0	175	175	175	175
Peak production	Cu.Yds/day	0	0	1400	1400	1400	1400
Annual PM10 Emissions							
Site preparation	tons/year	2.4	6.1	7.9	5.1	5.9	4.5
Batch plant 1	tons/year	0.0	0.0	0.5	0.6	1.1	1.1
Batch plant 2	tons/year	0.0	0.0	1.1	1.5	2.6	2.6
Total	tons/year	2.4	6.1	9.5	7.3	9.6	8.2
Peak Daily PM10 Emissions							
Site preparation	lb/day	21.8	55.4	77.3	45.6	32.0	24.2
Batch plant 1	lb/day	0.0	0.0	48.0	48.0	48.0	48.0
Batch plant 2	lb/day	0.0	0.0	112.0	112.0	112.0	112.0
Total	lb/day	21.8	55.4	237.3	205.6	192.0	184.2

Site construction fugitive dust emission factor

Heavy Construction Operations Emission Factor; 1995 AP-42, Section 13.2.3.3		1.20	(tons TSP/acre/mo)
Silt content variation from 30% (no adjustment)		1.00	(silt content)
Particle size multiplier for unpaved roads; 1995 AP-42, section 13.2.2.2		0.36	(% PM10/TSP)
Fugitive Dust Control from Thornthwaite (P-E) index; EPA 450/3-74-037, June 1974		0.04	(Control Efficiency)
	Total	0.017	(tons PM10/acre/mo)

Concrete batch plant fugitive dust emission factor

	Control Efficiency
Control efficiency for particulates from handling operations	
Percent captured via negative pressure system (1995 AP-42, Section 11.19.1; Sand & Gravel Processing)	85%
BACT control efficiency, baghouse or equivalent (Region VIII large scale Coal & Uranium deposits)	90%
Overall emission reduction efficiency (% capture * % control efficiency)	77%
Control efficiency for particulates from sand and aggregate storage piles (1995 AP-42 Section, 11.19.1)	
Control from combination of: large annual rainfall, high frequency of low wind velocity, wind screens	50%

Particulates from handling operations (1995 AP-42, Table 11.12-2; Concrete Batching)	Uncontrolled (lb/yd^3)	Control Efficiency	Controlled (lb/yd^3)
Sand and aggregate transfer to elevated bin	0.05	77%	0.012
Cement unloading to elevated storage bin (pneumatic)	0.07	77%	0.016
Weigh hopper loading	0.04	77%	0.009
Mixer loading (central mix)	0.07	0%	0.070
Particulates from wind erosion of the storage pile	0.10	50%	0.050
		Subtotal	0.158
Percent of particulate matter which is PM10: 1995 AP-42, Table B.2-2, Category 3;			51%
Generalized Particle Size Distribution for Mechanically Generated Aggregates		Total	0.080

APPENDIX B
EPA RACT/BACT/LAER CLEARINGHOUSE DATABASE

RBLCID	FACILITY	PROCESS	THRUPUT	THRUPUTU	POLLUTA	PRIMEMIS	PRIMEUNIT	CTRLDESC
NY-0048	KAMINE/BESICORP CORNING L.P.	BURNERS	90.00	MMBTU/HR	NOX	0.1000	LB/MMBTU	LOW NOX BURNER
FL-0054	LAKE COGEN LIMITED	BURNERS	150.00	MMBTU/H	NOX	0.1000	LB/MMBTU	NOT REQUIRED
NY-0046	SARANAC ENERGY COMPANY	BURNERS	553.00	MMBTU/HR	NOX	0.0800	LB/MMBTU	SCR
NY-0045	SELKIRK COGENERATION PARTNERS, L.P.	BURNERS	206.00	MMBTU/HR	NOX	0.0181	LB/MMBTU GAS	LOW NOX BURNER AND SCR
NY-0045	SELKIRK COGENERATION PARTNERS, L.P.	BURNERS	123.00	MMBTU/HR	NOX	0.0910	LB/MMBTU, GA	LOW NOX BURNER
FL-0072	TIGER BAY LP	BURNERS	100.00	MMBTU/H	NOX	0.1000	LB/MMBTU	GOOD COMBUSTION PRACTICES
VA-0184	BERMUDA HUNDRED ENERGY LIMITED PA	BURNERS	197.00	MMBTU/H N	NOX	9.0000	PPMVD @ 15%	SCR, STEAM INJ.
VA-0184	BERMUDA HUNDRED ENERGY LIMITED PA	BURNERS	189.00	MMBTU/H N	NOX	15.0000	PPMVD @ 15%	SCR, STEAM INJ.
NY-0046	SARANAC ENERGY COMPANY	BURNERS	553.00	MMBTU/HR	NOX	0.0800	LB/MMBTU	SCR
NY-0072	KAMINE/BESICORP SYRACUSE LP	BURNERS	90.00	MMBTU/HR	NOX	0.1000	LB/MMBTU	NO CONTROLS
VA-0184	BERMUDA HUNDRED ENERGY LIMITED PA	BURNERS	197.00	MMBTU/H N	CO	15.8000	LB/H/UNIT	FURNACE DESIGN
VA-0184	BERMUDA HUNDRED ENERGY LIMITED PA	BURNERS	189.00	MMBTU/H N	CO	18.9000	LB/H/UNIT	FURNACE DESIGN
NY-0046	SARANAC ENERGY COMPANY	BURNERS	553.00	MMBTU/HR	CO	0.0600	LB/MMBTU	OXIDATION CATALYST
NY-0072	KAMINE/BESICORP SYRACUSE LP	BURNERS	90.00	MMBTU/HR	CO	0.1500	LB/MMBTU	NO CONTROLS
FL-0054	LAKE COGEN LIMITED	BURNERS	150.00	MMBTU/H	CO	0.2000	LB/MMBTU	NOT REQUIRED
NY-0045	SELKIRK COGENERATION PARTNERS, L.P.	BURNERS	206.00	MMBTU/HR	CO	0.0730	LB/MMBTU GAS	COMBUSTION CONTROLS
NY-0045	SELKIRK COGENERATION PARTNERS, L.P.	BURNERS	123.00	MMBTU/HR	CO	0.0720	LB/MMBTU GAS	COMBUSTION CONTROL
NY-0046	SARANAC ENERGY COMPANY	BURNERS	553.00	MMBTU/HR	CO	0.0600	LB/MMBTU	OXIDATION CATALYST
FL-0072	TIGER BAY LP	BURNERS	100.00	MMBTU/H	CO	10.0000	LB/H	GOOD COMBUSTION PRACTICES
NY-0045	SELKIRK COGENERATION PARTNERS, L.P.	BURNERS	206.00	MMBTU/HR	PM/PM10	0.0140	LB/MMBTU, GA	COMBUSTION CONTROLS AND FUEL SPEC: LOW SULFUR OIL
NY-0046	SARANAC ENERGY COMPANY	BURNERS	553.00	MMBTU/HR	PM/PM10	0.0030	LB/MMBTU	COMBUSTION CONTROLS
NY-0048	KAMINE/BESICORP CORNING L.P.	BURNERS	90.00	MMBTU/HR	PM/PM10	0.0500	LB/MMBTU	COMBUSTION CONTROL
FL-0054	LAKE COGEN LIMITED	BURNERS	150.00	MMBTU/H	PM	0.0060	LB/MMBTU	FUEL SPEC: LIMITED TO NATURAL GAS
NY-0045	SELKIRK COGENERATION PARTNERS, L.P.	BURNERS	123.00	MMBTU/HR	PM/PM10	0.0140	LB/MMBTU, GA	COMBUSTION CONTROLS AND FUEL SPEC: LOW SULFUR OIL
FL-0072	TIGER BAY LP	BURNERS	100.00	MMBTU/H	PM	0.0100	LM/MMBTU	GOOD COMBUSTION PRACTICES
VA-0184	BERMUDA HUNDRED ENERGY LIMITED PA	BURNERS	197.00	MMBTU/H N	PM	5.0000	E-2 LB/MMBTU	FUEL SPEC: CLEAN BURN FUEL
VA-0184	BERMUDA HUNDRED ENERGY LIMITED PA	BURNERS	197.00	MMBTU/H N	PM10	5.0000	E-2	FUEL SPEC: CLEAN BURN FUEL
VA-0184	BERMUDA HUNDRED ENERGY LIMITED PA	BURNERS	189.00	MMBTU/H N	PM	5.0000	E-2 LB/MMBTU	FUEL SPEC: CLEAN BURN FUEL
VA-0184	BERMUDA HUNDRED ENERGY LIMITED PA	BURNERS	189.00	MMBTU/H N	PM10	5.0000	E-2 LB/MMBTU	FUEL SPEC: CLEAN BURN FUEL
NY-0046	SARANAC ENERGY COMPANY	BURNERS	553.00	MMBTU/HR	PM/PM10	0.0030	LB/MMBTU	COMBUSTION CONTROLS
NY-0072	KAMINE/BESICORP SYRACUSE LP	BURNERS	90.00	MMBTU/HR	PM,PM10	0.0500	LB/MMBTU, 4.5	FUEL SPEC: SULFUR CONTENT NOT TO EXCEED 0.15% BY WEIGHT
NY-0045	SELKIRK COGENERATION PARTNERS, L.P.	BURNERS	206.00	MMBTU/HR	SO2	0.2000	% SULFUR OIL	FUEL SPEC: LOW SULFUR OIL
VA-0184	BERMUDA HUNDRED ENERGY LIMITED PA	BURNERS	197.00	MMBTU/H N	SO2	9.0000	E-4 LB/MMBTU	FUEL SPEC: LOW SULFUR FUEL
VA-0184	BERMUDA HUNDRED ENERGY LIMITED PA	BURNERS	189.00	MMBTU/H N	SO2	6.8000	E-2 LB/MMBTU	FUEL SPEC: LOW SULFUR OIL
VA-0184	BERMUDA HUNDRED ENERGY LIMITED PA	BURNERS	197.00	MMBTU/H N	VOC	5.9000	LB/H/UNIT	FURNACE DESIGN
VA-0184	BERMUDA HUNDRED ENERGY LIMITED PA	BURNERS	189.00	MMBTU/H N	VOC	7.9000	LB/H/UNIT	FURNACE DESIGN
NY-0046	SARANAC ENERGY COMPANY	BURNERS	553.00	MMBTU/HR	VOC	0.0011	LB/MMBTU	OXIDATION CATALYST
NY-0072	KAMINE/BESICORP SYRACUSE LP	BURNERS	90.00	MMBTU/HR	VOC	0.0900	LB/MMBTU, 8.1	NO CONTROLS

RBLCID	FACILITY	PROCESS	THRUPU	THRUPUT	POLLUTA	PRIMEMIS	PRIMEUN	CTRLDESC
TN-0047	MIDWESTERN GAS	IC ENGINE, NATURAL GAS	2000.00	HP	NOX	58.0000	TPY	CLEAN BURN RETROFIT
TN-0047	MIDWESTERN GAS	IC ENGINE, NATURAL GAS	2700.00	HP	NOX	79.0000	TPY	CLEAN BURN RETROFIT
IA-0023	NORTHERN NATURAL GAS COMPANY	ENGINE, COMPRESSOR	4000.00	HP	NOX	1.8000	G/B-HP-H	GOOD COMBUSTION PRACTICES
IA-0023	NORTHERN NATURAL GAS COMPANY	ENGINES, COMPRESSOR, 2	2000.00	HP EACH	NOX	1.8000	G/B-HP-H	GOOD COMBUSTION PRACTICES
NY-0047	PASNY/HOLTSVILLE COMBINED CYCLE PLANT	FIRE PUMP (DIESEL)	1.30	MMBTU/H	NOX	1.3000	LB/MMBTU	LEAN BURN ENGINE
AK-0029	CITY OF ST.PAUL POWER PLANT	POWER GENERATION, DIESEL	3.40	MW	NO2	427.0000	TPY	AFTERCOOLERS
AK-0028	CITY OF UNALASKA	POWER GENERATION, DIESEL	6.50	MW	NO2	632.6000	TPY	LIMIT OF OPERATION HOURS AND AFTERCOOLERS
NY-0047	PASNY/HOLTSVILLE COMBINED CYCLE PLANT	GENERATOR, EMERGENCY (NATURAL (	1.50	MMBTU/H	NOX	1.3000	LB/MMBTU	LEAN BURN ENGINE
PA-0097	PHILADELPHIA NORTHEAST WATER TREATMEN	ENGINES (3) (NATURAL GAS)	443.00	KW (EACH	NOX	2.0000	G/B-HP-H	LEAN BURN ENGINE
CO-0022	SNYDER OIL CORP. / ENTERPRISE STATION	ENGINES, RECIPROCATING (6)	2500.00	HP (EACH	NOX	563.8000	LBS/MILLI	LEAN COMBUSTION & FUEL SPEC: FIRING RESIDUE QUALITY NAT. GAS
WY-0020	SNYDER OIL CORPORATION-RIVERTON DOME (	NATURAL GAS-FIRED COMPRESSOR EI	520.00	HORSEPO	NOX	2.3000	LBS/HR	RETROFIT W/AN AIR TO FUEL RATIO CONTROL W/ NON-SELECTIVE CATALYTIC REDUCTION (NSCR)
WY-0020	SNYDER OIL CORPORATION-RIVERTON DOME (	2 GAS-FIRED GENERATOR ENGINES	385.00	HORSEPO	NOX	1.7000	LBS/HR	RETROFIT W/AN AIR TO FUEL RATIO CONTROL W/ NON-SELECTIVE CATALYTIC REDUCTION (NSCR)
WY-0020	SNYDER OIL CORPORATION-RIVERTON DOME (	1 GAS-FIRED GENERATOR ENGINE	577.00	HORSEPO	NOX	2.5000	LBS/HR	RETROFIT W/AN AIR TO FUEL RATIO CONTROL W/ NON-SELECTIVE CATALYTIC REDUCTION (NSCR)
OK-0026	SWIFT ENERGY	ENGINES, I.C.	1132.00	HP EACH	NOX	23.8000	T/YR	CATALYTIC CONVERTER
PA-0095	TEMPLE UNIVERSITY	ELECTRIC GENERATOR (NATURAL GAS	1.60	MW	NOX	2.0000	GRAM/BH	LEAN BURN GAS ENGINE
TN-0043	TENNECO GAS	IC ENGINE, NATURAL GAS	5500.00	HP	NOX	160.0000	TPY	CLEAN BURN RETROFIT
TN-0046	TENNECO GAS	IC ENGINES, NATURAL GAS (2)	3400.00	HP	NOX	946.0000	TPY	PARAMETRIC CONTROL
TN-0046	TENNECO GAS	IC ENGINE, NATURAL GAS	408.00	HP	NOX	2.0000	G/B-HP-H	NON-SELECTIVE CATALYTIC REDUCTION (NSCR)
TN-0046	TENNECO GAS	IC ENGINE, NATURAL GAS	408.00	HP	NOX	2.0000	G/B-HP-H	PRE-STRATIFIED CHARGE
PA-0118	TRANSCONTINENTAL GAS PIPELINE CORP.	I.C. ENGINES, NATURAL GAS, UNITS 1-6	2050.00	HP	NOX	18.1000	LB/HR	LOW EMISSION COMBUSTION (LEC) TECHNOLOGY
PA-0118	TRANSCONTINENTAL GAS PIPELINE CORP.	I.C. ENGINES, NATURAL GAS, UNITS 7-9	2100.00	HP	NOX	18.5400	LB/HR	LOW EMISSION COMBUSTION (LEC) TECHNOLOGY
PA-0118	TRANSCONTINENTAL GAS PIPELINE CORP.	I.C. ENGINES, NATURAL GAS, UNITS 10	3400.00	HP	NOX	30.0000	LB/HR	LOW EMISSION COMBUSTION (LEC) TECHNOLOGY
PA-0118	TRANSCONTINENTAL GAS PIPELINE CORP.	I.C. ENGINES, NATURAL GAS, UNIT 12	5500.00	HP	NOX	48.5800	LB/HR	LOW EMISSION COMBUSTION (LEC) TECHNOLOGY
ND-0010	WESTERN GAS RESOURCES,INC.	COMPRESSOR ENGINE	1100.00	BHP	NO2	25.3000	LB/HR	GOOD COMBUSTION PRACTICES
NM-0021	WILLIAMS FIELD SERVICES CO. - EL CEDRO CO	ENGINE, GAS-FIRED, RECIPROCATING	1000.00	HP	NOX	1.4000	G/B-HP-H	CLEAN/LEAN BURN TECHNOLOGY
NY-0055	KES CHATEAUGAY PROJECT	DIESEL GENERATOR EP #00003	5.76	MMBTU/H	NOX	4.1500	LB/MMBTU	NO CONTROLS
CA-0417	UPF CORPORATION	ENGINE, DIESEL, EMERGENCY POWER	410.00	HP	NOX	0.0000		TURBOCHARGER WITH AFTERCOOLER, TIMING RETARD > OR = TO 4 DEGREES
VA-0218	NAVY PUBLIC WORKS CENTER	1 EMERGENCY GENERATOR	1500.00	KW	NOX	45.5000	TPY	RETARD TIMING 6 DEGREES
NY-0046	SARANAC ENERGY COMPANY	GENERATORS, STAND-BY (2)	19.48	MMBTU/H	NOX	0.3590	LB/MMBTU	LEAN BURN ENGINE
NY-0046	SARANAC ENERGY COMPANY	GENERATOR, EMERGENCY (#2 DIESEL	14.68	MMBTU/H	NOX	2.4700	LB/MMBTU	LEAN BURN ENGINE
NY-0047	PASNY/HOLTSVILLE COMBINED CYCLE PLANT	GENERATOR, EMERGENCY (NATURAL (	1.50	MMBTU/H	NOX	1.3000	LB/MMBTU	LEAN BURN ENGINE
NY-0047	PASNY/HOLTSVILLE COMBINED CYCLE PLANT	FIRE PUMP (DIESEL)	1.30	MMBTU/H	NOX	1.3000	LB/MMBTU	LEAN BURN ENGINE
CA-0453	UPF CORPORATION	ENGINE, DIESEL	410.00	HP	NOX	0.0000		TURBOCHARGER W/ AFTERCOOLER
NY-0046	SARANAC ENERGY COMPANY	GENERATOR, MAINTENANCE (#2 FUEL (	4.85	MMBTU/H	NOX	2.9100	LB/MMBTU	LEAN BURN ENGINE
NY-0050	SITHE/INDEPENDENCE POWER PARTNERS	GENERATOR, EMERGENCY (OIL)	25.00	MMBTU/H	NOX	3.4000	LB/MMBTU	COMBUSTION CONTROLS
WI-0083	CARDINAL FLAT GLASS	GENERATOR, BACK-UP, DIESEL	0.00		NOX	67.5000	LBS/HR	FUEL SPEC: LOW SULFUR (0.05%) DIESEL FUEL
HI-0011	CITIZENS UTILITIES CO., KAUAI ELECT. DIV.	ENGINE, I.C. DIESEL-FIRED, 4 EACH	7.86	MW EACH	NOX	590.0000	PPMVD F	VARIABLE FITR, TURBOCHARGING AND INTERCOOLING
NY-0072	KAMINE/BESICORP SYRACUSE LP	DIESEL GENERATOR (EP #00005)	22.00	MMBTU/H	NOX	1.1660	LB/MMBTU	NO CONTROLS
NY-0072	KAMINE/BESICORP SYRACUSE LP	FIRE PUMP (EP #00007)	1.50	MMBTU/H	NOX	4.2500	LB/MMBTU	NO CONTROLS
MN-0022	LSP-COTTAGE GROVE, L.P.	DIESEL ENGINE-DRIVEN FIRE PUMP	2.70	MMBTU/H	NOX	5.0000	LB/HR	RETARDATION OF ENGINE TIMING; TURBOCHARGER AFTERCOOLING
HI-0016	MAUI ELECTRIC COMPANY LIMITED	ENGINE GENERATOR, DIESEL (3)	2.20	MW	NOX	656.0000	PPMVD	FUEL INJECTION TIMING RETARD WITH INTAKE AIR COOLING
HI-0017	MAUI ELECTRIC COMPANY, LTD.	ENGINE GENERATORS (3), DIESEL	2.20	MW	NOX	656.0000	PPMVD	FUEL INJECTION TIMING RETARD WITH INTAKE AIR COOLING
PA-0097	PHILADELPHIA NORTHEAST WATER TREATMEN	ENGINES (3) (NATURAL GAS)	443.00	KW (EACH	NOX	2.0000	G/B-HP-H	LEAN BURN ENGINE
PA-0097	PHILADELPHIA NORTHEAST WATER TREATMEN	ENGINES (7) (DIESEL)	1635.00	KW (EACH	NOX	2.0000	G/B-HP-H	SCR
PA-0096	PHILADELPHIA SOUTHWEST WATER TREATME	ENGINES (2) (NATURAL GAS)	443.00	KW (EACH	NOX	2.0000	G/B-HP-H	LEAN BURN ENGINE
PA-0096	PHILADELPHIA SOUTHWEST WATER TREATME	ENGINES (11) (DIESEL)	1158.00	KW (EACH	NOX	2.0000	G/B-HP-H	SCR
WI-0083	CARDINAL FLAT GLASS	GENERATOR, BACK-UP, DIESEL	0.00		SO2	0.7000	LBS/HR	FUEL SPEC: LOW SULFUR (0.05%) DIESEL FUEL
NY-0050	SITHE/INDEPENDENCE POWER PARTNERS	GENERATOR, EMERGENCY (OIL)	25.00	MMBTU/H	SO2	0.0500	% SULFUI	FUEL SPEC: LOW SULFUR OILS
HI-0011	CITIZENS UTILITIES CO., KAUAI ELECT. DIV.	ENGINE, I.C. DIESEL-FIRED, 4 EACH	7.86	MW EACH	SO2	96.0000	PPMVD	FUEL SPEC: MAX FUEL S CONTENT 0.5% BY WEIGHT
HI-0016	MAUI ELECTRIC COMPANY LIMITED	ENGINE GENERATOR, DIESEL (3)	2.20	MW	SO2	76.0000	PPMVD	FUEL SPEC: SULFUR CONTENT .47 BY WEIGHT
HI-0017	MAUI ELECTRIC COMPANY, LTD.	ENGINE GENERATORS (3), DIESEL	2.20	MW	SO2	76.0000	PPMVD	FUEL SPEC: SULFUR CONTENT 0.4% BY WEIGHT
NY-0047	PASNY/HOLTSVILLE COMBINED CYCLE PLANT	FIRE PUMP (DIESEL)	1.30	MMBTU/H	SO2	0.2000	% SULFUI	FUEL SPEC: LOW SULFUR OIL
NY-0047	PASNY/HOLTSVILLE COMBINED CYCLE PLANT	GENERATOR, EMERGENCY (NATURAL (	1.50	MMBTU/H	SO2	0.0000		FUEL SPEC: CLEAN FUEL
VA-0218	NAVY PUBLIC WORKS CENTER	5 ENGINE GENERATORS	1600.00	KW	SO2	4.2000	TPY	FUEL SPEC: 0.20% S FUEL OIL
CA-0417	UPF CORPORATION	ENGINE, DIESEL, EMERGENCY POWER	410.00	HP	SO2	0.0000		FUEL SPEC: FUEL OIL W/ < 0.05% SULFUR CONTENT
CA-0453	UPF CORPORATION	ENGINE, DIESEL	410.00	HP	SOX	0.0000		FUEL SPEC: FUEL OIL W/ < 0.05% SULFUR CONTENT
NY-0047	PASNY/HOLTSVILLE COMBINED CYCLE PLANT	FIRE PUMP (DIESEL)	1.30	MMBTU/H	SO2	0.2000	% SULFUI	FUEL SPEC: LOW SULFUR OIL
NY-0047	PASNY/HOLTSVILLE COMBINED CYCLE PLANT	GENERATOR, EMERGENCY (NATURAL (	1.50	MMBTU/H	SO2	0.0000		FUEL SPEC: CLEAN FUEL
CO-0022	SNYDER OIL CORP. / ENTERPRISE STATION	ENGINES, RECIPROCATING (6)	2500.00	HP (EACH	SO2	0.6000	LB/MILLIO	LEAN COMBUSTION & FUEL SPEC: FIRING RESIDUE QUALITY NAT. GAS
PA-0097	PHILADELPHIA NORTHEAST WATER TREATMEN	ENGINES (3) (NATURAL GAS)	443.00	KW (EACH	VOC	0.0000		LEAN BURN ENGINE
NY-0047	PASNY/HOLTSVILLE COMBINED CYCLE PLANT	GENERATOR, EMERGENCY (NATURAL (	1.50	MMBTU/H	VOC	6.5000	LB/MMBTU	COMBUSTION CONTROL
NY-0047	PASNY/HOLTSVILLE COMBINED CYCLE PLANT	FIRE PUMP (DIESEL)	1.30	MMBTU/H	VOC	0.7100	LB/MMBTU	COMBUSTION CONTROL
IA-0023	NORTHERN NATURAL GAS COMPANY	ENGINES, COMPRESSOR, 2	2000.00	HP EACH	VOC	2.5000	G/B-HP-H	GOOD COMBUSTION PRACTICES
NM-0021	WILLIAMS FIELD SERVICES CO. - EL CEDRO CO	ENGINE, GAS-FIRED, RECIPROCATING	1000.00	HP	VOC	2.5000	G/B-HP-H	CLEAN/LEAN BURN TECHNOLOGY
NY-0055	KES CHATEAUGAY PROJECT	DIESEL GENERATOR EP #00003	5.76	MMBTU/H	VOC	1.3900	LB/MMBTU	NO CONTROLS
IA-0023	NORTHERN NATURAL GAS COMPANY	ENGINE, COMPRESSOR	4000.00	HP	VOC	0.6500	G/B-HP-H	GOOD COMBUSTION PRACTICES
IA-0023	NORTHERN NATURAL GAS COMPANY	ENGINES, COMPRESSOR, 2	2000.00	HP EACH	VOC	0.6500	G/B-HP-H	GOOD COMBUSTION PRACTICES
CA-0505	TEXACO EXPLORATION & PRODUCTION INCOR	COMPRESSOR, FIXED ROOF STOAGE V	15.00	HP	VOC	0.0000		CRANKCASE BREATHER VENTED TO COMPRESSOR SUCTION INLET
LA-0082	TEXACO INC. - ONSHORE DIVISION	COMPRESSORS, RECIPROCATING (3)	1642.00	HP (EACH	VOC	0.0000		LEAN BURN ENGINE

NM-0021	WILLIAMS FIELD SERVICES CO. - EL CEDRO CO	ENGINE, GAS-FIRED, RECIPROCATING	1000.00	HP	VOC	1.0000	G/B-HP-H	CLEAN/LEAN BURN TECHNOLOGY
PA-0096	PHILADELPHIA SOUTHWEST WATER TREATME	ENGINES (11) (DIESEL)	1156.00	KW (EACH	VOC	0.0000		SCR
NY-0055	KES CHATEAUGAY PROJECT	DIESEL GENERATOR EP #00003	5.76	MMBTU/H	VOC	0.1100	LB/MMBTU	NO CONTROLS
NY-0046	SARANAC ENERGY COMPANY	GENERATORS, STAND-BY (2)	19.48	MMBTU/HR (EACH)		0.1440	LB/MMBTU	COMBUSTION CONTROL
NY-0046	SARANAC ENERGY COMPANY	GENERATOR, EMERGENCY (#2 DIESEL	14.68	MMBTU/HR		0.1080	LB/MMBTU	COMBUSTION CONTROL
NY-0046	SARANAC ENERGY COMPANY	GENERATOR, MAINTENANCE (#2 FUEL	4.85	MMBTU/HR		0.0350	LB/MMBTU	COMBUSTION CONTROL
HI-0011	CITIZENS UTILITIES CO., KAUAI ELECT. DIV.	ENGINE, I.C. DIESEL-FIRED, 4 EACH	7.86	MW EACH		228.0000	PPMVD FU	HIGH COMBUSTION EFFICIENCY
NY-0072	KAMINE/BESICORP SYRACUSE LP	DIESEL GENERATOR (EP #00005)	22.00	MMBTU/HR		0.0160	LB/MMBTU	NO CONTROLS
NY-0072	KAMINE/BESICORP SYRACUSE LP	FIRE PUMP (EP #00007)	1.50	MMBTU/HR		0.0550	LB/MMBTU	NO CONTROLS
MN-0022	LSP-COTTAGE GROVE, L.P.	DIESEL ENGINE-DRIVEN FIRE PUMP	2.70	MMBTU/HR		1.9000	LB/HR	FUEL SELECTION; GOOD COMBUSTION
HI-0016	MAUI ELECTRIC COMPANY LIMITED	ENGINE GENERATOR, DIESEL (3)	2.20	MW		81.0000	PPMVD	COMBUSTION DESIGN (INCLUDING FITR
HI-0017	MAUI ELECTRIC COMPANY, LTD.	ENGINE GENERATORS (3), DIESEL	2.20	MW		81.0000	PPMVD	COMBUSTION DESIGN, INCLUDING FITR
PA-0097	PHILADELPHIA NORTHEAST WATER TREATMEN	ENGINES (3) (NATURAL GAS)	443.00	KW (EACH)		0.0000		LEAN BURN ENGINE
PA-0097	PHILADELPHIA NORTHEAST WATER TREATMEN	ENGINES (7) (DIESEL)	1635.00	KW (EACH)		0.0000		SCR
PA-0096	PHILADELPHIA SOUTHWEST WATER TREATME	ENGINES (2) (NATURAL GAS)	443.00	KW (EACH)		0.0000		LEAN BURN ENGINE
PA-0097	PHILADELPHIA NORTHEAST WATER TREATMEN	ENGINES (7) (DIESEL)	1635.00	KW (EACH	VOC	0.0000		SCR
PA-0096	PHILADELPHIA SOUTHWEST WATER TREATME	ENGINES (2) (NATURAL GAS)	443.00	KW (EACH	VOC	0.0000		LEAN BURN ENGINE
PA-0096	PHILADELPHIA SOUTHWEST WATER TREATME	ENGINES (11) (DIESEL)	1156.00	KW (EACH	VOC	0.0000		SCR
NY-0046	SARANAC ENERGY COMPANY	GENERATOR, EMERGENCY (#2 DIESEL	14.68	MMBTU/H	VOC	0.1080	LB/MMBTU	COMBUSTION CONTROL
CO-0022	SNYDER OIL CORP. / ENTERPRISE STATION	ENGINES, RECIPROCATING (6)	2500.00	HP (EACH	VOC	141.3000	LBS/MILLI	LEAN COMBUSTION & FUEL SPEC: FIRING RESIDUE QUALITY NAT. GAS
WY-0020	SNYDER OIL CORPORATION-RIVERTON DOME	NATURAL GAS-FIRED COMPRESSOR EI	520.00	HORSEPO	VOC	0.5000	LBS/HR	GOOD COMBUSTION
WY-0020	SNYDER OIL CORPORATION-RIVERTON DOME	2 GAS-FIRED GENERATOR ENGINES	385.00	HORSEPO	VOC	0.4000	LBS/HR	GOOD COMBUSTION
WY-0020	SNYDER OIL CORPORATION-RIVERTON DOME	1 GAS-FIRED GENERATOR ENGINE	577.00	HORSEPO	VOC	0.6000	LBS/HR	GOOD COMBUSTION
OK-0026	SWIFT ENERGY	ENGINES, I.C.	1132.00	HP EACH	VOC	7.1000	T/YR	CATALYTIC CONVERTER
PA-0095	TEMPLE UNIVERSITY	ELECTRIC GENERATOR (NATURAL GAS	1.60	MW	VOC	31.0000	LBS/HR	LEAN BURN GAS ENGINE
PA-0097	PHILADELPHIA NORTHEAST WATER TREATMEN	ENGINES (3) (NATURAL GAS)	443.00	KW (EACH	CO	0.3200	G/B-HP-H	LEAN BURN ENGINE
PA-0097	PHILADELPHIA NORTHEAST WATER TREATMEN	ENGINES (3) (NATURAL GAS)	443.00	KW (EACH	CO	0.0000		LEAN BURN ENGINE
PA-0097	PHILADELPHIA NORTHEAST WATER TREATMEN	ENGINES (3) (NATURAL GAS)	443.00	KW (EACH	CO	0.0000		LEAN BURN ENGINE
PA-0097	PHILADELPHIA NORTHEAST WATER TREATMEN	ENGINES (7) (DIESEL)	1635.00	KW (EACH	CO	0.3200	G/B-HP-H	SCR
PA-0097	PHILADELPHIA NORTHEAST WATER TREATMEN	ENGINES (7) (DIESEL)	1635.00	KW (EACH	CO	0.0000		SCR
PA-0096	PHILADELPHIA SOUTHWEST WATER TREATME	ENGINES (2) (NATURAL GAS)	443.00	KW (EACH	CO	0.3200	G/B-HP-H	LEAN BURN ENGINE
PA-0096	PHILADELPHIA SOUTHWEST WATER TREATME	ENGINES (2) (NATURAL GAS)	443.00	KW (EACH	CO	0.0000		LEAN BURN ENGINE
PA-0096	PHILADELPHIA SOUTHWEST WATER TREATME	ENGINES (11) (DIESEL)	1156.00	KW (EACH	CO	0.3200	G/B-HP-H	SCR
NY-0046	SARANAC ENERGY COMPANY	GENERATOR, EMERGENCY (#2 DIESEL	14.68	MMBTU/H	CO	1.7600	LB/MMBTU	COMBUSTION CONTROL
NY-0046	SARANAC ENERGY COMPANY	GENERATOR, MAINTENANCE (#2 FUEL	4.85	MMBTU/H	CO	0.0470	LB/MMBTU	COMBUSTION CONTROL
NY-0050	SITHE/INDEPENDENCE POWER PARTNERS	GENERATOR, EMERGENCY (OIL)	25.00	MMBTU/H	CO	0.9200	LB/MMBTU	COMBUSTION CONTROLS
WI-0083	CARDINAL FLAT GLASS	GENERATOR, BACK-UP, DIESEL	0.00		CO	4.7500	LBS/HR	FUEL SPEC: LOW SULFUR (0.05%) DIESEL FUEL
HI-0011	CITIZENS UTILITIES CO., KAUAI ELECT. DIV.	ENGINE, I.C. DIESEL-FIRED, 4 EACH	7.86	MW EACH	CO	156.0000	PPMVD FU	HIGH COMBUSTION EFFICIENCY
HI-0011	CITIZENS UTILITIES CO., KAUAI ELECT. DIV.	ENGINE, I.C. DIESEL-FIRED, 4 EACH	7.86	MW EACH	CO	0.1000	LB/MMBTU	DIESEL FUEL OIL, HIGH COMB. EFF.
NY-0072	KAMINE/BESICORP SYRACUSE LP	DIESEL GENERATOR (EP #00005)	22.00	MMBTU/H	CO	0.0160	LB/MMBTU	NO CONTROLS
NY-0072	KAMINE/BESICORP SYRACUSE LP	FIRE PUMP (EP #00007)	1.50	MMBTU/H	CO	0.2000	LB/MMBTU	FUEL SPEC: SULFUR CONTENT NOT TO EXCEED 0.15% BY WEIGHT
MN-0022	LSP-COTTAGE GROVE, L.P.	DIESEL ENGINE-DRIVEN FIRE PUMP	2.70	MMBTU/H	CO	1.9000	LB/HR	FUEL SELECTION; GOOD COMBUSTION
NY-0047	PASNY/HOLTSVILLE COMBINED CYCLE PLANT	FIRE PUMP (DIESEL)	1.30	MMBTU/H	CO	0.7100	LB/MMBTU	COMBUSTION CONTROL
NY-0047	PASNY/HOLTSVILLE COMBINED CYCLE PLANT	GENERATOR, EMERGENCY (NATURAL	1.50	MMBTU/H	CO	6.5000	LB/MMBTU	COMBUSTION CONTROL
PA-0097	PHILADELPHIA NORTHEAST WATER TREATMEN	ENGINES (3) (NATURAL GAS)	443.00	KW (EACH	CO	0.0000		LEAN BURN ENGINE
PA-0097	PHILADELPHIA NORTHEAST WATER TREATMEN	ENGINES (7) (DIESEL)	1635.00	KW (EACH	CO	0.0000		SCR
PA-0096	PHILADELPHIA SOUTHWEST WATER TREATME	ENGINES (2) (NATURAL GAS)	443.00	KW (EACH	CO	0.0000		LEAN BURN ENGINE
PA-0096	PHILADELPHIA SOUTHWEST WATER TREATME	ENGINES (11) (DIESEL)	1156.00	KW (EACH	CO	0.0000		SCR
NY-0046	SARANAC ENERGY COMPANY	GENERATOR, EMERGENCY (#2 DIESEL	14.68	MMBTU/H	CO	1.7600	LB/MMBTU	COMBUSTION CONTROL
CO-0022	SNYDER OIL CORP. / ENTERPRISE STATION	ENGINES, RECIPROCATING (6)	2500.00	HP (EACH	CO	635.1000	LBS/MILLI	LEAN COMBUSTION & FUEL SPEC: FIRING RESIDUE QUALITY NAT. GAS
WY-0020	SNYDER OIL CORPORATION-RIVERTON DOME	NATURAL GAS-FIRED COMPRESSOR EI	520.00	HORSEPO	CO	1.7000	LBS/HR	GOOD COMBUSTION
WY-0020	SNYDER OIL CORPORATION-RIVERTON DOME	2 GAS-FIRED GENERATOR ENGINES	385.00	HORSEPO	CO	1.3000	LBS/HR	GOOD COMBUSTION
WY-0020	SNYDER OIL CORPORATION-RIVERTON DOME	1 GAS-FIRED GENERATOR ENGINE	577.00	HORSEPO	CO	1.9000	LBS/HR	GOOD COMBUSTION
OK-0026	SWIFT ENERGY	ENGINES, I.C.	1132.00	HP EACH	CO	35.7000	T/YR	CATALYTIC CONVERTER
PA-0095	TEMPLE UNIVERSITY	ELECTRIC GENERATOR (NATURAL GAS	1.60	MW	CO	1.9200	GRAMS/B	LEAN BURN GAS ENGINE
PA-0097	PHILADELPHIA NORTHEAST WATER TREATMEN	ENGINES (3) (NATURAL GAS)	443.00	KW (EACH	PM	0.3200	G/B-HP-H	LEAN BURN ENGINE
PA-0097	PHILADELPHIA NORTHEAST WATER TREATMEN	ENGINES (7) (DIESEL)	1635.00	KW (EACH	PM	0.3200	G/B-HP-H	SCR
PA-0096	PHILADELPHIA SOUTHWEST WATER TREATME	ENGINES (2) (NATURAL GAS)	443.00	KW (EACH	PM	0.3200	G/B-HP-H	LEAN BURN ENGINE
PA-0096	PHILADELPHIA SOUTHWEST WATER TREATME	ENGINES (11) (DIESEL)	1156.00	KW (EACH	PM	0.3200	G/B-HP-H	SCR
NY-0046	SARANAC ENERGY COMPANY	GENERATOR, EMERGENCY (#2 DIESEL	14.68	MMBTU/H	PM/PM10	0.0470	LB/MMBTU	COMBUSTION CONTROL
CO-0022	SNYDER OIL CORP. / ENTERPRISE STATION	ENGINES, RECIPROCATING (6)	2500.00	HP (EACH	PM10	10.0000	LB/MILLIO	LEAN COMBUSTION & FUEL SPEC: FIRING RESIDUE QUALITY NAT. GAS

RBLCID	FACILITY	PROCESS	THRUPU	THRUPUTUNT	POLLUTAN	PRIMEMIS	PRIMEUNIT	CTRLDESC
AZ-0022	INTEL CORPORATION	BOILERS, 5	50	MMBTU/HR	NOX	0.0000		LOW NOX BURNERS
MI-0206	KALAMAZOO POWER LIMITED	BOILER, BACK-UP, GAS-FIRED, W/ EMER GEN.	500	KW	NOX	0.0200	LB/MMBTU	
NJ-0013	LAKEWOOD COGENERATION, L.P.	BOILER (NATURAL GAS)	131	MMBTU/HR	NOX	0.1000	LB/MMBTU	LOW NOX BURNERS
NJ-0013	LAKEWOOD COGENERATION, L.P.	BOILER (DISTILLATE FUEL)	131	MMBTU/HR	NOX	0.2000	LB/MMBTU	LOW NOX BURNERS
GA-0063	MID-GEORGIA COGEN.	BOILER, NATURAL GAS	60	MMBTU/HR	NOX	0.1000	LB/MMBTU	DRY LOW NOX BURNER WITH FGR
GA-0063	MID-GEORGIA COGEN.	BOILER, FUEL OIL	60	MMBTU/HR	NOX	0.1500	LB/MMBTU	DRY LOW NOX BURNER WITH FGR
NJ-0017	NEWARK BAY COGENERATION PA	BOILER, AUXILIARY, NATURAL GAS-FIRED	200	MMBTU/HR	NOX	0.0500	LB/MMBTU	LOW NOX BURNERS, FLUE GAS RECIRCULATION (FGR)
PA-0083	NORTHERN CONSOLIDATED POWE	BOILER, AUXILIARY, NATURAL GAS	100	MMBTU/H	NOX	0.1000	LB/MMBTU	
FL-0068	ORANGE COGENERATION LP	BOILER, AUXILIARY, NG	100	MMBTU/H	NOX	0.1300	LB/MMBTU	LOW NOX BURNERS
OR-0010	PORTLAND GENERAL ELECTRIC C	BOILERS, AUXILIARY, NATURAL GAS (2)	361	MMBTU	NOX	0.1000	LB/MMBTU	LOW NOX BURNER AND FLUE GAS RECIRCULATION
NY-0046	SARANAC ENERGY COMPANY	BOILER, AUXILIARY (GAS OR LPG)	249	MMBTU/HR	NOX	0.1360	LB/MMBTU	LOW NOX BURNERS
WI-0065	APPLETON PAPER, INC.	BOILER, NATURAL GAS FUEL	200000	LBS STEAM/HR	NOX	0.0500	LB/MMBTU	LOW NOX BURNERS AND FLUE GAS REINDUCTOR
WI-0065	APPLETON PAPER, INC.	BOILER, NO. 2 OIL FUEL	200000	LBS STEAM/HR	NOX	0.1000	LB/MMBTU	LOW NOX BURNERS AND FLUE GAS REINDUCTOR
VA-0184	BERMUDA HUNDRED ENERGY LIM	BOILER, PACKAGE	250	MMBTU/H NAT.	NOX	0.1000	LB/MMBTU	LOW NOX BURNER
NY-0055	KES CHATEAUGAY PROJECT	AUXILIARY BOILER EP #00002	5	MMBTU/HR	NOX	0.2000	LB/MMBTU	NO CONTROLS
NJ-0013	LAKEWOOD COGENERATION, L.P.	BOILER (NATURAL GAS)	131	MMBTU/HR	NOX	0.1000	LB/MMBTU	LOW NOX BURNERS
NJ-0013	LAKEWOOD COGENERATION, L.P.	BOILER (DISTILLATE FUEL)	131	MMBTU/HR	NOX	0.2000	LB/MMBTU	LOW NOX BURNERS
GA-0063	MID-GEORGIA COGEN.	BOILER, NATURAL GAS	60	MMBTU/HR	NOX	0.1000	LB/MMBTU	DRY LOW NOX BURNER WITH FGR
GA-0063	MID-GEORGIA COGEN.	BOILER, FUEL OIL	60	MMBTU/HR	NOX	0.1500	LB/MMBTU	DRY LOW NOX BURNER WITH FGR
FL-0048	OKEELANDA CORPORATION	BOILER, 1 EACH	205	MMBTU/H	NOX	0.1800	LB/MMBTU	COMBUSTION CONTROL
VA-0181	OLD DOMINION ELECTRIC COOPER	BOILERS, AUXILIARY, #2 FUEL-FIRED, 2	214	MMBTU/H	NOX	0.2000	LB/MMBTU	OPERATING HOURS
FL-0068	ORANGE COGENERATION LP	BOILER, AUXILIARY, NG	100	MMBTU/H	NOX	0.1300	LB/MMBTU	LOW NOX BURNERS
FL-0090	PINEY POINT PHOSPHATES, INC.	SUBPART DB BOILER, 0.05% S FO	190	MMBTU/HR	NOX	28.5000	LB/HR	LOW NOX BURNERS, EGR
NY-0046	SARANAC ENERGY COMPANY	BOILER, AUXILIARY (GAS OR LPG)	249	MMBTU/HR	NOX	0.1360	LB/MMBTU	LOW NOX BURNERS
NY-0050	SITHE/INDEPENDENCE POWER PA	BOILERS, AUXILIARY	750	MMBTU/HR	NOX	0.2000	LB/MMBTU	COMBUSTION CONTROLS
NY-0072	KAMINE/BESICORP SYRACUSE LP	(3) UTILITY BOILER (EP #S 00002-4)	33	MMBTU/HR	NOX	0.0350	LB/MMBTU	INDUCED FLUE GAS RECIRCULATION (FGR)
MN-0022	LSP-COTTAGE GROVE, L.P.	AUXILIARY BOILERS (2), NAT. GAS/DIST. OIL	112	MMBTU/HR	NOX	0.0600	LB/MMBTU	LOW NOX BURNERS & FLUE GAS RECIRCULATION (FGR)
VA-0207	PORTSMOUTH NAVAL HOSPITAL	BOILERS, 6	5430000	GAL/YR	NOX	54.3000	LB/HR	GOOD COMBUSTION PRACTICES, FUEL SPEC: 5% S FUEL
VA-0207	PORTSMOUTH NAVAL HOSPITAL	GENERATORS, DIESEL, 6	748000	GAL/YR	NOX	33.2000	LB/HR	RETARDING THE TIMING BY 5 DEGREES
CA-0562	RESOURCE RENEWAL TECHNOLO	ENGINE, I.C.	951	BHP	NOX	6.6000	G/B-HP-H	TURBOCHARGER, AFTERCOOLER, INJECTION TIMING RETARD OF >= 4 DEGREES
CA-0586	ROBISON, CARLON AND CARLON	GENERATOR, DIESEL	0		NOX	4.0000	DEGREE TI	4 DEGREE TIMING RETARD
VA-0191	RW POWER PARTNERS, L.P.	GENERATORS, ELECTRIC (DIESEL) (3)	1200	KW (EACH)	NOX	137.3000	LB/HR	TURBOCHARGER AND INNER COOLER
CA-0422	RYAN-MURPHY INCORPORATED	GENERATOR, DIESEL-FIRED, NON-EMERGENCY	211	BHP @ 1800 RP	NOX	2.8600	LB/H	TIMING RETARDED, TURBOCHARGED WATER INJECTION*
SC-0027	SOUTH CAROLINA ELECTRIC AND	GENERATOR, NO 2 OIL - EMERGENCY	400	KILOWATTS	NOX	13.1000	LB/HR	
SC-0027	SOUTH CAROLINA ELECTRIC AND	BOILER, NO 2 OIL - AUXILIARY	190	MMBTU/HR	NOX	32.4000	LB/H	
Carbon Monoxide (CO)								
MI-0206	KALAMAZOO POWER LIMITED	BOILER, BACK-UP, GAS-FIRED, W/ EMER GEN.	500	KW	CO	0.0030	LB/MMBTU	
NJ-0013	LAKEWOOD COGENERATION, L.P.	BOILER (NATURAL GAS)	131	MMBTU/HR	CO	0.0420	LB/MMBTU	BOILER DESIGN
NJ-0013	LAKEWOOD COGENERATION, L.P.	BOILER (DISTILLATE FUEL)	131	MMBTU/HR	CO	0.1700	LB/MMBTU	BOILER DESIGN
GA-0063	MID-GEORGIA COGEN.	BOILER, NATURAL GAS	60	MMBTU/HR	CO	0.0500	LB/MMBTU	COMPLETE COMBUSTION
GA-0063	MID-GEORGIA COGEN.	BOILER, FUEL OIL	60	MMBTU/HR	CO	0.0900	LB/MMBTU	COMPLETE COMBUSTION
NJ-0017	NEWARK BAY COGENERATION PA	BOILER, AUXILIARY, NATURAL GAS-FIRED	200	MMBTU/HR	CO	0.0400	LB/MMBTU	BOILER DESIGN
OR-0010	PORTLAND GENERAL ELECTRIC C	BOILERS, AUXILIARY, NATURAL GAS (2)	361	MMBTU	CO	56.0000	PPM @ 15%	GOOD COMBUSTION PRACTICES
NY-0046	SARANAC ENERGY COMPANY	BOILER, AUXILIARY (GAS OR LPG)	249	MMBTU/HR	CO	0.1180	LB/MMBTU	COMBUSTION CONTROLS
WI-0065	APPLETON PAPER, INC.	BOILER, NATURAL GAS FUEL	200000	LBS STEAM/HR	CO	0.1200	LB/MMBTU	PROPER COMBUSTION
WI-0065	APPLETON PAPER, INC.	BOILER, NO. 2 OIL FUEL	200000	LBS STEAM/HR	CO	0.1200	LB/MMBTU	PROPER COMBUSTION
VA-0184	BERMUDA HUNDRED ENERGY LIM	BOILER, PACKAGE	250	MMBTU/H NAT.	CO	20.4000	LB/H	FURNACE DESIGN
NY-0055	KES CHATEAUGAY PROJECT	AUXILIARY BOILER EP #00002	5	MMBTU/HR	CO	0.0360	LB/MMBTU	NO CONTROLS
NJ-0013	LAKEWOOD COGENERATION, L.P.	BOILER (NATURAL GAS)	131	MMBTU/HR	CO	0.0420	LB/MMBTU	BOILER DESIGN
NJ-0013	LAKEWOOD COGENERATION, L.P.	BOILER (DISTILLATE FUEL)	131	MMBTU/HR	CO	0.1700	LB/MMBTU	BOILER DESIGN
GA-0063	MID-GEORGIA COGEN.	BOILER, NATURAL GAS	60	MMBTU/HR	CO	0.0500	LB/MMBTU	COMPLETE COMBUSTION
GA-0063	MID-GEORGIA COGEN.	BOILER, FUEL OIL	60	MMBTU/HR	CO	0.0900	LB/MMBTU	COMPLETE COMBUSTION
VA-0181	OLD DOMINION ELECTRIC COOPER	BOILERS, AUXILIARY, #2 FUEL-FIRED, 2	214	MMBTU/H	CO	0.1800	LB/MMBTU	OPERATING HOURS
NY-0046	SARANAC ENERGY COMPANY	BOILER, AUXILIARY (GAS OR LPG)	249	MMBTU/HR	CO	0.1180	LB/MMBTU	COMBUSTION CONTROLS
NY-0050	SITHE/INDEPENDENCE POWER PA	BOILERS, AUXILIARY	750	MMBTU/HR	CO	0.0200	LB/MMBTU	COMBUSTION CONTROLS
NY-0072	KAMINE/BESICORP SYRACUSE LP	(3) UTILITY BOILER (EP #S 00002-4)	33	MMBTU/HR	CO	0.0380	LB/MMBTU	NO CONTROLS
VA-0207	PORTSMOUTH NAVAL HOSPITAL	BOILERS, 6	5430000	GAL/YR	CO	13.6000	LB/HR	GOOD COMBUSTION PRACTICES, FUEL SPEC: .5% S FUEL
VA-0207	PORTSMOUTH NAVAL HOSPITAL	GENERATORS, DIESEL, 6	748000	GAL/YR	CO	8.4000	LB/HR	RETARDING THE TIMING BY 5 DEGREES
VA-0191	RW POWER PARTNERS, L.P.	GENERATORS, ELECTRIC (DIESEL) (3)	1200	KW (EACH)	CO	3.4000	LB/HR	GOOD COMBUSTION PRACTICES
CA-0422	RYAN-MURPHY INCORPORATED	GENERATOR, DIESEL-FIRED, NON-EMERGENCY	211	BHP @ 1800 RP	CO	0.0000	LB/H	3-WAY CATALYTIC CONVERTER
SC-0027	SOUTH CAROLINA ELECTRIC AND	GENERATOR, NO 2 OIL - EMERGENCY	400	KILOWATTS	CO	1.0000	LB/HR	
SC-0027	SOUTH CAROLINA ELECTRIC AND	BOILER, NO 2 OIL - AUXILIARY	190	MMBTU/HR	CO	6.8000	LB/H	
PM10								
AZ-0022	INTEL CORPORATION	BOILERS, 5	50	MMBTU/HR	SOX/PM10	0.0000		FUEL SPEC: NATURAL GAS PRIMARY, .055 WT % S FUEL OIL BACKUP ONLY
NJ-0013	LAKEWOOD COGENERATION, L.P.	BOILER (NATURAL GAS)	131	MMBTU/HR	PM	0.0050	LB/MMBTU	BOILER DESIGN
NJ-0013	LAKEWOOD COGENERATION, L.P.	BOILER (DISTILLATE FUEL)	131	MMBTU/HR	PM	0.0200	LB/MMBTU	BOILER DESIGN
GA-0063	MID-GEORGIA COGEN.	BOILER, NATURAL GAS	60	MMBTU/HR	PM	0.0050	LB/MMBTU	COMPLETE COMBUSTION
GA-0063	MID-GEORGIA COGEN.	BOILER, FUEL OIL	60	MMBTU/HR	PM	0.0280	LB/MMBTU	COMPLETE COMBUSTION
NJ-0017	NEWARK BAY COGENERATION PA	BOILER, AUXILIARY, NATURAL GAS-FIRED	200	MMBTU/HR	PM10	0.0050	LB/MMBTU	BOILER DESIGN/FGR

NY-0046	SARANAC ENERGY COMPANY	BOILER, AUXILIARY (GAS OR LPG)	249	MMBTU/HR	PM/PM10	0.0045	LB/MMBTU	COMBUSTION CONTROLS
VA-0184	BERMUDA HUNDRED ENERGY UM	BOILER, PACKAGE	250	MMBTU/H NAT.	PM	0.1000	LB/MMBTU	FUEL SPEC: CLEAN BURN FUEL
VA-0184	BERMUDA HUNDRED ENERGY UM	BOILER, PACKAGE	250	MMBTU/H NAT.	PM10	0.1000	LB/MMBTU	FUEL SPEC: CLEAN BURN FUEL
NY-0055	KES CHATEAUGAY PROJECT	AUXILIARY BOILER EP #00002	5	MMBTU/HR	PM,PM10	0.0300	LB/MMBTU	NO CONTROLS
NJ-0013	LAKEWOOD COGENERATION, L.P.	BOILER (NATURAL GAS)	131	MMBTU/HR	PM	0.0050	LB/MMBTU	BOILER DESIGN
NJ-0013	LAKEWOOD COGENERATION, L.P.	BOILER (DISTILLATE FUEL)	131	MMBTU/HR	PM	0.0200	LB/MMBTU	BOILER DESIGN
GA-0063	MID-GEORGIA COGEN.	BOILER, NATURAL GAS	60	MMBTU/HR	PM	0.0050	LB/MMBTU	COMPLETE COMBUSTION
GA-0063	MID-GEORGIA COGEN.	BOILER, FUEL OIL	60	MMBTU/HR	PM	0.0280	LB/MMBTU	COMPLETE COMBUSTION
VA-0181	OLD DOMINION ELECTRIC COOPER	BOILERS, AUXILIARY, #2 FUEL-FIRED, 2	214	MMBTU/H	PM/PM10	0.0300	LB/MMBTU	OPERATING HOURS
NY-0046	SARANAC ENERGY COMPANY	BOILER, AUXILIARY (GAS OR LPG)	249	MMBTU/HR	PM/PM10	0.0045	LB/MMBTU	COMBUSTION CONTROLS
NY-0050	SITHE/INDEPENDENCE POWER PA	BOILERS, AUXILIARY	750	MMBTU/HR	PM	0.0500	LB/MMBTU	COMBUSTION CONTROLS
NY-0072	KAMINE/BESICORP SYRACUSE LP	(3) UTILITY BOILER (EP #S 00002-4)	33	MMBTU/HR	PM,PM10	0.0100	LB/MMBTU	FUEL SPEC: SULFUR CONTENT NOT TO EXCEED 0.15% BY WEIGHT
MN-0022	LSP-COTTAGE GROVE, L.P.	AUXILIARY BOILERS (2), NAT. GAS/DIST. OIL	112	MMBTU/HR	PM10	0.6000	LB/HR GAS	FUEL SELECTION; GOOD COMBUSTION
VA-0207	PORTSMOUTH NAVAL HOSPITAL	BOILERS, 6	5430000	GAL/YR	PM10	2.7000	LB/HR	GOOD COMBUSTION PRACTICES, FUEL SPEC: .5% S FUEL
VA-0207	PORTSMOUTH NAVAL HOSPITAL	GENERATORS, DIESEL, 6	748000	GAL/YR	TSP/PM10	3.6000	LB/HR	RETARDING THE TIMING BY 5 DEGREES
VA-0191	RW POWER PARTNERS, L.P.	GENERATORS, ELECTRIC (DIESEL) (3)	1200	KW (EACH)	TSP/PM10	3.4000	LB/HR	GOOD COMBUSTION PRACTICES
CA-0422	RYAN-MURPHY INCORPORATED	GENERATOR, DIESEL-FIRED, NON-EMERGENCY	211	BHP @ 1800 RP	PM10	0.0900	LB/H	WATER INJECTION
SC-0027	SOUTH CAROLINA ELECTRIC AND	BOILER, NO 2 OIL - AUXILIARY	190	MMBTU/HR	PM	2.7000	LB/H	FUEL SPEC: LOW ASH CONTENT FUEL OIL
SC-0027	SOUTH CAROLINA ELECTRIC AND	BOILER, NO 2 OIL - AUXILIARY	190	MMBTU/HR	PM10	2.7000	LB/H	FUEL SPEC: LOW ASH CONTENT FUEL OIL
VOC								
NJ-0013	LAKEWOOD COGENERATION, L.P.	BOILER (NATURAL GAS)	131	MMBTU/HR	VOC	0.0017	LB/MMBTU	BOILER DESIGN
NJ-0013	LAKEWOOD COGENERATION, L.P.	BOILER (DISTILLATE FUEL)	131	MMBTU/HR	VOC	0.0074	LB/MMBTU	BOILER DESIGN
GA-0063	MID-GEORGIA COGEN.	BOILER, NATURAL GAS	60	MMBTU/HR	VOC	0.0050	LB/MMBTU	COMPLETE COMBUSTION
GA-0063	MID-GEORGIA COGEN.	BOILER, FUEL OIL	60	MMBTU/HR	VOC	0.0080	LB/MMBTU	COMPLETE COMBUSTION
NJ-0017	NEWARK BAY COGENERATION PA	BOILER, AUXILIARY, NATURAL GAS-FIRED	200	MMBTU/HR	VOC	0.0050	LB/MMBTU	BOILER DESIGN
PA-0130	PROCTOR AND GAMBLE PAPER PR	BOILERS #2 AND #4	70	MMBTU/HR	VOC	0.0284	LB/MMBTU	REROUTING OF PULP PLANT EMISSIONS TO BOILERS 2 AND 4
NY-0046	SARANAC ENERGY COMPANY	BOILER, AUXILIARY (GAS OR LPG)	249	MMBTU/HR	VOC	0.0045	LB/MMBTU	COMBUSTION CONTROLS
WI-0065	APPLETON PAPER, INC.	BOILER, NATURAL GAS FUEL	200000	LBS STEAM/HR	VOC	0.0020	LB/MMBTU	
WI-0065	APPLETON PAPER, INC.	BOILER, NO. 2 OIL FUEL	200000	LBS STEAM/HR	VOC	0.0020	LB/MMBTU	
VA-0184	BERMUDA HUNDRED ENERGY UM	BOILER, PACKAGE	250	MMBTU/H NAT.	VOC	5.8000	LB/H	FURNACE DESIGN
NY-0055	KES CHATEAUGAY PROJECT	AUXILIARY BOILER EP #00002	5	MMBTU/HR	VOC	0.0300	LB/MMBTU	NO CONTROLS
NJ-0013	LAKEWOOD COGENERATION, L.P.	BOILER (NATURAL GAS)	131	MMBTU/HR	VOC	0.0017	LB/MMBTU	BOILER DESIGN
NJ-0013	LAKEWOOD COGENERATION, L.P.	BOILER (DISTILLATE FUEL)	131	MMBTU/HR	VOC	0.0074	LB/MMBTU	BOILER DESIGN
GA-0063	MID-GEORGIA COGEN.	BOILER, NATURAL GAS	60	MMBTU/HR	VOC	0.0050	LB/MMBTU	COMPLETE COMBUSTION
GA-0063	MID-GEORGIA COGEN.	BOILER, FUEL OIL	60	MMBTU/HR	VOC	0.0080	LB/MMBTU	COMPLETE COMBUSTION
VA-0181	OLD DOMINION ELECTRIC COOPER	BOILERS, AUXILIARY, #2 FUEL-FIRED, 2	214	MMBTU/H	VOC	0.0120	LB/MMBTU	OPERATING HOURS
NY-0046	SARANAC ENERGY COMPANY	BOILER, AUXILIARY (GAS OR LPG)	249	MMBTU/HR	VOC	0.0045	LB/MMBTU	COMBUSTION CONTROLS
NY-0072	KAMINE/BESICORP SYRACUSE LP	(3) UTILITY BOILER (EP #S 00002-4)	33	MMBTU/HR	VOC	0.0030	LB/MMBTU	NO CONTROLS
MN-0022	LSP-COTTAGE GROVE, L.P.	AUXILIARY BOILERS (2), NAT. GAS/DIST. OIL	112	MMBTU/HR	VOC	0.6000	LB/HR GAS	FUEL SELECTION; GOOD COMBUSTION
CA-0562	RESOURCE RENEWAL TECHNOLO	ENGINE, I.C.	951	BHP	VOC	0.3300	G/B-HP-H	POSITIVE CRANKCASE VENTILLATION
VA-0191	RW POWER PARTNERS, L.P.	GENERATORS, ELECTRIC (DIESEL) (3)	1200	KW (EACH)	VOC	4.6000	LB/HR	GOOD COMBUSTION PRACTICES
CA-0422	RYAN-MURPHY INCORPORATED	GENERATOR, DIESEL-FIRED, NON-EMERGENCY	211	BHP @ 1800 RP	VOC	0.0900	LB/H	3-WAY CATALYTIC CONVERTER, POSITIVE CRANKCASE VENTILATION
SO2								
AZ-0022	INTEL CORPORATION	BOILERS, 5	50	MMBTU/HR	SOX/PM10	0.0000		FUEL SPEC: NATURAL GAS PRIMARY, .055 WT % S FUEL OIL BACKUP ONLY
NJ-0013	LAKEWOOD COGENERATION, L.P.	BOILER (NATURAL GAS)	131	MMBTU/HR	SO2	0.0069	LB/MMBTU	FUEL SPEC: USE OF NATURAL GAS
NJ-0013	LAKEWOOD COGENERATION, L.P.	BOILER (DISTILLATE FUEL)	131	MMBTU/HR	SO2	0.2100	LB/MMBTU	FUEL SPEC: USE OF LOW SULFUR OIL
GA-0063	MID-GEORGIA COGEN.	BOILER, FUEL OIL	60	MMBTU/HR	SO2	0.0000	SEE P2	FUEL SPEC: VERY LOW SULFUR IN FUEL
NJ-0017	NEWARK BAY COGENERATION PA	BOILER, AUXILIARY, NATURAL GAS-FIRED	200	MMBTU/HR	SO2	0.0026	LB/MMBTU	FUEL SPEC: USE OF NATURAL GAS
FL-0068	ORANGE COGENERATION LP	BOILER, AUXILIARY, NG	100	MMBTU/H	SO2	0.0030	LB/MMBTU	FUEL SPEC: LOW SULFUR FUEL, GAS FIRED
WI-0065	APPLETON PAPER, INC.	BOILER, NATURAL GAS FUEL	200000	LBS STEAM/HR	SO2	0.0010	LB/MMBTU	
WI-0065	APPLETON PAPER, INC.	BOILER, NO. 2 OIL FUEL	200000	LBS STEAM/HR	SO2	0.5070	LB/MMBTU	
VA-0184	BERMUDA HUNDRED ENERGY UM	BOILER, PACKAGE	250	MMBTU/H NAT.	SO2	9.0000	E-4 LB/MMB	FUEL SPEC: LOW SULFUR FUEL
NJ-0013	LAKEWOOD COGENERATION, L.P.	BOILER (NATURAL GAS)	131	MMBTU/HR	SO2	0.0069	LB/MMBTU	FUEL SPEC: USE OF NATURAL GAS
NJ-0013	LAKEWOOD COGENERATION, L.P.	BOILER (DISTILLATE FUEL)	131	MMBTU/HR	SO2	0.2100	LB/MMBTU	FUEL SPEC: USE OF LOW SULFUR OIL
GA-0063	MID-GEORGIA COGEN.	BOILER, FUEL OIL	60	MMBTU/HR	SO2	0.0000	SEE P2	FUEL SPEC: VERY LOW SULFUR IN FUEL
VA-0218	NAVY PUBLIC WORKS CENTER	BOILERS	0		SO2	2.6400	LB/MMBTU	
FL-0048	OKEELANDA CORPORATION	BOILER, 1 EACH	205	MMBTU/H	SO2	0.0000		FUEL SPEC: LIMIT FUEL SULFUR CONTENT
VA-0181	OLD DOMINION ELECTRIC COOPER	BOILERS, AUXILIARY, #2 FUEL-FIRED, 2	214	MMBTU/H	SO2	0.1100	LB/MMBTU	FUEL SPEC: LOW SULFUR FUEL
FL-0068	ORANGE COGENERATION LP	BOILER, AUXILIARY, NG	100	MMBTU/H	SO2	0.0030	LB/MMBTU	FUEL SPEC: LOW SULFUR FUEL, GAS FIRED
NY-0050	SITHE/INDEPENDENCE POWER PA	BOILERS, AUXILIARY	750	MMBTU/HR	SO2	0.0500	% SULFUR	FUEL SPEC: LOW SULFUR OIL
VA-0207	PORTSMOUTH NAVAL HOSPITAL	BOILERS, 6	5430000	GAL/YR	SO2	194.9000	LB/HR	GOOD COMBUSTION PRACTICES, FUEL SPEC: .5% S FUEL
VA-0207	PORTSMOUTH NAVAL HOSPITAL	GENERATORS, DIESEL, 6	748000	GAL/YR	SO2	5.4000	LB/HR	RETARDING THE TIMING BY 5 DEGREES
CA-0562	RESOURCE RENEWAL TECHNOLO	ENGINE, I.C.	951	BHP	SO2	0.2380	G/B-HP-H	FUEL SPEC: USE OF LOW SULFUR FUEL (<= 0.05% S BY WEIGHT)
VA-0191	RW POWER PARTNERS, L.P.	GENERATORS, ELECTRIC (DIESEL) (3)	1200	KW (EACH)	SO2	18.1000	LB/HR	FUEL SPEC: USE OF 0.5% SULFUR FUEL
CA-0422	RYAN-MURPHY INCORPORATED	GENERATOR, DIESEL-FIRED, NON-EMERGENCY	211	BHP @ 1800 RP	SOX	0.0200	LB/H AS SO	FUEL SPEC: 0.05% DIESEL FUEL SULFUR CONTENT
SC-0027	SOUTH CAROLINA ELECTRIC AND	GENERATOR, NO 2 OIL - EMERGENCY	400	KILOWATTS	SO2	1.2000	LB/HR	FUEL SPEC: 0.3% SULFUR CONTENT FUEL; LIMIT OPER <500 HOURS/YEAR
SC-0027	SOUTH CAROLINA ELECTRIC AND	BOILER, NO 2 OIL - AUXILIARY	190	MMBTU/HR	SO2	58.2000	LB/H	FUEL SPEC: LOW SULFUR CONTENT FUEL OIL 0.3%

RBLCID NOx	FACILITY	PROCESS	THRU	THRUPUTUNT	POLLUTANT	PRIMEMISS	PRIMEUNIT	CTRLDESC
LA-0086	INTERNATIONAL PAPER	TURBINE/HRSG, GAS COGEN	338	MM BTU/HR TURBINE	NOX	25.0000	PPMV 15% O2 TURBINE	DRY LOW NOX COMBUSTOR/COMBUSTION CONTROL
FL-0078	KISSIMMEE UTILITY AUTHORITY	TURBINE, NATURAL GAS	367	MMBTU/H	NOX	15.0000	PPM @ 15% O2	DRY LOW NOX COMBUSTOR
FL-0078	KISSIMMEE UTILITY AUTHORITY	TURBINE, FUEL OIL	371	MMBTU/H	NOX	42.0000	PPM @ 15% O2	WATER INJECTION
FL-0054	LAKE COGEN LIMITED	TURBINE, GAS, 2 EACH	42	MW	NOX	25.0000	PPM @ 15% O2	COMBUSTION CONTROL
FL-0054	LAKE COGEN LIMITED	TURBINE, OIL, 2 EACH	42	MW	NOX	42.0000	PPM @ 15% O2	COMBUSTION CONTROL
NJ-0011	LINDEN COGENERATION TECHN	TURBINE, NATURAL GAS FIRE	50	X E12 BTU/YR	NO2	33.8000	LB/HR	STEAM INJECTION AND SCR
NM-0022	MARATHON OIL CO. - INDIAN BA	TURBINES, NATURAL GAS (2)	5500	HP	NOX	7.4000	LBS/HR	LEAN-PREMIXED COMBUSTION TECHNOLOGY. DRY/LOW NOX
NM-0024	MILAGRO, WILLIAMS FIELD SER	TURBINE/COGEN, NATURAL (	900	MMCF/DAY	NO2	9.0000	PPM @ 15% O2	DRY LOW NOX (GENERAL ELECTRIC MODEL PG6541B)
RI-0010	NARRAGANSETT ELECTRIC/NEW	TURBINE, GAS AND DUCT BU	1360	MMBTU/H EACH	NOX	9.0000	PPM @ 15% O2, GAS	SCR
NV-0017	NEVADA POWER COMPANY, HA	COMBUSTION TURBINE ELEC	600	MW (8 UNITS 75 EACH)	NO2	88.6000	TPY (EACH TURBINE)	LOW NOX COMBUSTOR
NJ-0009	NEWARK BAY COGENERATION F	TURBINE, NATURAL GAS FIRE	585	MMBTU/HR	NOX	0.0330	LB/MMBTU	STEAM INJECTION AND SCR
NJ-0017	NEWARK BAY COGENERATION F	TURBINES, COMBUSTION, NA	617	MMBTU/HR (EACH)	NOX	8.3000	PPMDV	SCR
PA-0083	NORTHERN CONSOLIDATED PO	TURBINES, GAS, 2	35	KW EACH	NOX	25.0000	PPM @ 15% O2	STEAM INJECTION/+SCR IN 1997
PA-0083	NORTHERN CONSOLIDATED PO	GENERATORS, DIESEL, 2	1135	KW EACH	NOX	36.0000	LB/H EACH	
WA-0274	NORTHWEST PIPELINE COMPAN	TURBINE, GAS-FIRED	12100	HP	NO2	196.0000	PPM @ 15% O2	ADVANCED DRY LOW NOX COMBUSTOR (BY 07/01/95)
CO-0021	NORTHWEST PIPELINE CORPOR	TURBINE, SOLAR TAURUS	45	MMBTU/HR	NO2	95.0000	PPMVD (UNTIL 11/98)	DRY LOW NOX COMBUSTOR (BY 11/01/98)
CA-0443	NUGGET OIL CO.	GENERATOR, STEAM, GAS FI	63	MMBTU/H	NOX	0.0430	LB/MMBTU	LOW NOX BURNER AND FLUE GAS RECIRCULATION*
FL-0068	ORANGE COGENERATION LP	TURBINE, NATURAL GAS, 2	368	MMBTU/H	NOX	15.0000	PPM @ 15% O2	DRY LOW NOX COMBUSTOR
MA-0015	PEABODY MUNICIPAL LIGHT PLA	TURBINE, 38 MW NATURAL FA	412	MMBTU/HR	NOX	25.0000	PPM @ 15% O2	WATER INJECTION
MA-0015	PEABODY MUNICIPAL LIGHT PLA	TURBINE, 38 MW OIL FIRED	412	MMBTU/HR	NOX	40.0000	PPM @ 15% O2	WATER INJECTION
NJ-0010	PEDRICKTOWN COGENERATION	TURBINE, NATURAL GAS FIRE	1000	MMBTU/HR	NOX	0.0440	LB/MMBTU	STEAM INJECTION AND SCR
MD-0021	PEPCO - STATION A	TURBINE, 124 MW NATURAL (	125	MW	NO2	42.0000	PPM @ 15% O2	WATER INJECTION
MD-0021	PEPCO - STATION A	TURBINE, 124 MW OIL FIRED	125	MW	NO2	77.0000	PPM @ 15% O2	WATER INJECTION
CO-0023	PHOENIX POWER PARTNERS	TURBINE (NATURAL GAS)	311	MMBTU/HR	NOX	22.0000	PPM @ 15% O2	DRY LOW NOX COMBUSTION
OR-0010	PORTLAND GENERAL ELECTRIC	TURBINES, NATURAL GAS (2)	1720	MMBTU	NOX	4.5000	PPM @ 15% O2	SCR
PA-0130	PROCTOR AND GAMBLE PAPER	TURBINE, NATURAL GAS	580	MMBTU/HR	NOX	55.0000	PPM @ 15% O2	STEAM INJECTION
NY-0080	PROJECT ORANGE ASSOCIATES	GE LM-5000 GAS TURBINE	550	MMBTU/HR	NOX	25.0000	PPM, 47 LB/HR	STEAM INJECTION, FUEL SPEC; NATURAL GAS ONLY
NY-0046	SARANAC ENERGY COMPANY	TURBINES, COMBUSTION (2)	1123	MMBTU/HR (EACH)	NOX	9.0000	PPM	SCR
SC-0029	SC ELECTRIC AND GAS COMPAN	INTERNAL COMBUSTION TUR	110	MEGAWATTS	NOX	308.0000	LBS/HR	WATER INJECTION
NY-0045	SELKIRK COGENERATION PART	COMBUSTION TURBINES (2) (	1173	MMBTU/HR (EACH)	NOX	9.0000	PPM GAS	STEAM INJECTION AND SCR
NY-0045	SELKIRK COGENERATION PART	COMBUSTION TURBINE (79 M	1173	MMBTU/HR	NOX	25.0000	PPM GAS	STEAM INJECTION
FL-0059	SEMINOLE FERTILIZER CORPOR	TURBINE, GAS	26	MW	NOX	9.0000	PPM @ 15% O2	SCR
CA-0416	SOUTHERN CALIFORNIA GAS	TURBINE, GAS-FIRED	48	MMBTU/H	NOX	8.0000	PPMVD @ 15% O2	HIGH TEMPERATURE SELECTIVE CATALYTIC REDUCTION
CA-0463	SOUTHERN CALIFORNIA GAS	TURBINE, GAS FIRED, SOLAR	5500	HP	NOX	8.0000	PPM @ 15% O2	HIGH TEMP SELECT. CAT. REDUCTION
MD-0017	SOUTHERN MARYLAND ELECTRI	TURBINE, NATURAL GAS FIRE	90	MW	NO2	199.0000	LB/HR	WATER INJECTION
MD-0017	SOUTHERN MARYLAND ELECTRI	TURBINE, OIL FIRED ELECTRI	90	MW	NO2	400.0000	LB/HR	WATER INJECTION
WA-0027	SUMAS ENERGY INC.	TURBINE, NATURAL GAS	88	MW	NOX	6.0000	PPM @ 15% O2	SCR
CO-0017	THERMO INDUSTRIES, LTD.	TURBINE, GAS FIRED, 5 EACH	248	MMBTU/H	NOX	25.0000	PPM @ 15% O2	DRY LOW NOX TECH.
FL-0072	TIGER BAY LP	TURBINE, GAS	1615	MMBTU/H	NOX	15.0000	PPM @ 15% O2	DRY LOW NOX COMBUSTOR
FL-0072	TIGER BAY LP	TURBINE, OIL	1850	MMBTU/H	NOX	42.0000	PPM @ 15% O2	WATER INJECTION
CA-0613	UNOCAL	TURBINE, GAS (SEE NOTES)	0		NOX	9.0000	PPM @ 15% O2	SELECTIVE CATALYTIC REDUCTION (SCR), WATER INJECTN
TX-0231	WEST CAMPUS COGENERATION	GAS TURBINES	75	MW (TOTAL POWER)	NOX	200.0000	TPY	INTERNAL COMBUSTION CONTROLS
NM-0021	WILLIAMS FIELD SERVICES CO.	TURBINE, GAS-FIRED	11257	HP	NOX	42.0000	PPM @ 15% O2	SOLONOX COMBUSTOR, DRY LOW NOX TECHNOLOGY
VA-0184	BERMUDA HUNDRED ENERGY L	TURBINE, COMBUSTION	1175	MMBTU/H NAT. GAS	NOX	9.0000	PPM @ 15% O2	SCR, STEAM INJECTION
VA-0184	BERMUDA HUNDRED ENERGY L	TURBINE, COMBUSTION	1117	MMBTU/H NO2 FUEL OI	NOX	15.0000	PPM @ 15% O2	SCR, STEAM INJ.
NJ-0013	LAKEWOOD COGENERATION, L.	TURBINES (NATURAL GAS) (2	1190	MMBTU/HR (EACH)	NOX	0.0330	LB/MMBTU	SCR, DRY LOW NOX BURNER
NJ-0013	LAKEWOOD COGENERATION, L.	TURBINES (#2 FUEL OIL) (2)	1190	MMBTU/HR (EACH)	NOX	0.0820	LB/MMBTU	SCR AND WATER INJECTION
GA-0063	MID-GEORGIA COGEN.	COMBUSTION TURBINE (2), N	116	MW	NOX	9.0000	PPMVD	DRY LOW NOX BURNER WITH SCR
GA-0063	MID-GEORGIA COGEN.	COMBUSTION TURBINE (2), F	116	MW	NOX	20.0000	PPMVD	WATER INJECTION WITH SCR
FL-0068	ORANGE COGENERATION LP	TURBINE, NATURAL GAS, 2	368	MMBTU/H	NOX	15.0000	PPM @ 15% O2	DRY LOW NOX COMBUSTOR
NY-0046	SARANAC ENERGY COMPANY	TURBINES, COMBUSTION (2)	1123	MMBTU/HR (EACH)	NOX	9.0000	PPM	SCR
NY-0050	SITHE/INDEPENDENCE POWER	TURBINES, COMBUSTION (4)	2133	MMBTU/HR (EACH)	NOX	4.5000	PPM	SCR AND DRY LOW NOX
MD-0019	BALTIMORE GAS & ELECTRIC - F	TURBINE, 140 MW NATURAL (	140	MW	NO2	15.0000	PPM @ 15% O2	DRY BURN LOW NOX BURNERS
MD-0019	BALTIMORE GAS & ELECTRIC - F	TURBINE, 140 MW OIL FIRED (	140	MW	NO2	65.0000	PPM @ 15% O2	WATER INJECTION
CA-0611	BANK OF AMERICA LOS ANGELE	TURBINE, DIESEL & GENERAT	0		NOX	163.0000	PPM @ 15% O2	FUEL SPEC: LOW NOX DIESEL FUEL (SEE NOTES)
NY-0072	KAMINE/BESICORP SYRACUSE L	SIEMENS V84.3 GAS TURBINE	650	MMBTU/HR	NOX	25.0000	PPM	WATER INJECTION
NY-0081	LILCO SHOREHAM	(3) GE FRAME 7 TURBINES (E	850	MMBTU/HR	NOX	55.0000	PPM +FBN & HEAT RAT	WATER INJECTION
MN-0022	LSP-COTTAGE GROVE, L.P.	COMBUSTION TURBINE/GENE	1970	MMBTU/HR	NOX	4.5000	PPM @ 15% O2 GAS	SELECTIVE CATALYTIC REDUCTION (SCR)
PA-0083	NORTHERN CONSOLIDATED PO	TURBINES, GAS, 2	35	KW EACH	NOX	25.0000	PPM @ 15% O2	STEAM INJECTION/+SCR IN 1997
NY-0047	PASNY/HOLTSVILLE COMBINED	TURBINE, COMBUSTION GAS	1146	MMBTU/HR (GAS)*	NOX (FROM GAS)	9.0000	PPM	DRY LOW NOX
NY-0047	PASNY/HOLTSVILLE COMBINED	TURBINE, COMBUSTION GAS	1146	MMBTU/HR (GAS)*	NOX (FROM OIL)	42.0000	PPM	WATER INJECTOR
MA-0015	PEABODY MUNICIPAL LIGHT PLA	TURBINE, 38 MW NATURAL FA	412	MMBTU/HR	NOX	25.0000	PPM @ 15% O2	WATER INJECTION
MA-0015	PEABODY MUNICIPAL LIGHT PLA	TURBINE, 38 MW OIL FIRED	412	MMBTU/HR	NOX	40.0000	PPM @ 15% O2	WATER INJECTION
MD-0018	PEPCO - CHALK POINT PLANT	TURBINE, 105 MW NATURAL (	105	MW	NO2	77.0000	PPM @ 15% O2	DRY PREMIX AND WATER INJECTION
MD-0018	PEPCO - CHALK POINT PLANT	TURBINE, 105 MW OIL FIRED (	105	MW	NO2	25.0000	PPM @ 15% O2	DRY PREMIX BURNER
MD-0018	PEPCO - CHALK POINT PLANT	TURBINE, 84 MW NATURAL G	84	MW	NO2	25.0000	PPM @ 15% O2	QUIET COMBUSTION AND WATER INJECTION
MD-0018	PEPCO - CHALK POINT PLANT	TURBINE, 84 MW OIL FIRED E	84	MW	NO2	58.0000	PPM @ 15% O2	QUIET COMBUSTION AND WATER INJECTION
MD-0021	PEPCO - STATION A	TURBINE, 124 MW NATURAL (	125	MW	NO2	42.0000	PPM @ 15% O2	WATER INJECTION

MD-0021	PEPCO - STATION A	TURBINE, 124 MW OIL FIRED	125	MW	NO2	77.0000	PPM @ 15% O2	WATER INJECTION
MD-0017	SOUTHERN MARYLAND ELECTR	TURBINE, NATURAL GAS FIRE	90	MW	NO2	199.0000	LB/HR	WATER INJECTION
CO								
LA-0086	INTERNATIONAL PAPER	TURBINE/HRSG, GAS COGEN	338	MM BTU/HR TURBINE	CO	165.9000	LB/HR	COMBUSTION CONTROL
FL-0078	KISSIMMEE UTILITY AUTHORITY	TURBINE, NATURAL GAS	367	MMBTU/H	CO	40.0000	LB/H	GOOD COMBUSTION PRACTICES
FL-0078	KISSIMMEE UTILITY AUTHORITY	TURBINE, FUEL OIL	371	MMBTU/H	CO	76.0000	LB/H	GOOD COMBUSTION PRACTICES
FL-0054	LAKE COGEN LIMITED	TURBINE, GAS, 2 EACH	42	MW	CO	42.0000	PPM @ 15% O2	COMBUSTION CONTROL
FL-0054	LAKE COGEN LIMITED	TURBINE, OIL, 2 EACH	42	MW	CO	78.0000	PPM @ 15% O2	COMBUSTION CONTROL
NM-0022	MARATHON OIL CO. - INDIAN BA	TURBINES, NATURAL GAS (2)	5500	HP	CO	13.2000	LBS/HR	LEAN-PREMIXED COMBUSTION TECHNOLOGY.
NM-0024	MILAGRO, WILLIAMS FIELD SER	TURBINE/COGEN, NATURAL (	900	MMCF/DAY	CO	27.8000	PPM @ 15% O2	
RI-0010	NARRAGANSETT ELECTRIC/NEV	TURBINE, GAS AND DUCT BU	1360	MMBTU/H EACH	CO	11.0000	PPM @ 15% O2, GAS	
NV-0017	NEVADA POWER COMPANY, HA	COMBUSTION TURBINE ELEC	600	MW (8 UNITS 75 EACH)	CO	152.5000	TPY (EACH TURBINE)	PRECISION CONTROL FOR THE LOW NOX COMBUSTOR
NJ-0009	NEWARK BAY COGENERATION F	TURBINE, NATURAL GAS FIRE	585	MMBTU/HR	CO	0.0055	LB/MMBTU	CATALYTIC OXIDATION
NJ-0017	NEWARK BAY COGENERATION F	TURBINES, COMBUSTION, NA	617	MMBTU/HR (EACH)	CO	1.8000	PPMDV	OXIDATION CATALYST
PA-0083	NORTHERN CONSOLIDATED PO	TURBINES, GAS, 2	35	KW EACH	CO	110.0000	T/YR	OXIDATION CATALYST
PA-0083	NORTHERN CONSOLIDATED PO	GENERATORS, DIESEL, 2	1135	KW EACH	CO	7.9000	LB/H EACH	
FL-0068	ORANGE COGENERATION LP	TURBINE, NATURAL GAS, 2	368	MMBTU/H	CO	30.0000	PPMVD	GOOD COMBUSTION
MA-0015	PEABODY MUNICIPAL LIGHT PL	TURBINE, 38 MW NATURAL F	412	MMBTU/HR	CO	40.0000	PPM @ 15% O2	GOOD COMBUSTION PRACTICES
CO-0023	PHOENIX POWER PARTNERS	GENERATOR, STEAM, W/ DUC	50	MMBTU/HR	CO	91.1800	TPY	FUEL SPEC: NATURAL GAS COMBUSTION
OR-0010	PORTLAND GENERAL ELECTRIC	TURBINES, NATURAL GAS (2)	1720	MMBTU	CO	15.0000	PPM @ 15% O2	GOOD COMBUSTION PRACTICES
NY-0080	PROJECT ORANGE ASSOCIATES	GE LM-5000 GAS TURBINE	550	MMBTU/HR	CO	92.0000	LB/HR TEMP > 20F	NO CONTROLS
NY-0046	SARANAC ENERGY COMPANY	TURBINES, COMBUSTION (2)	1123	MMBTU/HR (EACH)	CO	3.0000	PPM	OXIDATION CATALYST
SC-0029	SC ELECTRIC AND GAS COMPAN	INTERNAL COMBUSTION TUR	110	MEGAWATTS	CO	23.0000	LBS/HR	GOOD COMBUSTION PRACTICES
NY-0045	SELKIRK COGENERATION PART	COMBUSTION TURBINES (2) (	1173	MMBTU/HR (EACH)	CO	10.0000	PPM	COMBUSTION CONTROLS
NY-0045	SELKIRK COGENERATION PART	COMBUSTION TURBINE (79 M	1173	MMBTU/HR	CO	25.0000	PPM	COMBUSTION CONTROL
CA-0418	SOUTHERN CALIFORNIA GAS	TURBINE, GAS-FIRED	48	MMBTU/H	CO	7.7400	PPM @ 15% O2	HIGH TEMPERATURE OXIDATION CATALYST
CA-0463	SOUTHERN CALIFORNIA GAS	TURBINE, GAS FIRED, SOLAR	5500	HP	CO	7.7400	PPM @ 15% O2	HIGH TEMP OXIDATION CATALYST
WA-0027	SUMAS ENERGY INC.	TURBINE, NATURAL GAS	88	MW	CO	6.0000	PPM @ 15% O2	CO CATALYST
CO-0017	THERMO INDUSTRIES, LTD.	TURBINE, GAS FIRED, 5 EACH	246	MMBTU/H	CO	25.0000	PPM @ 15% O2	COMBUSTION CONTROL
FL-0072	TIGER BAY LP	TURBINE, GAS	1815	MMBTU/H	CO	49.0000	LB/H	GOOD COMBUSTION PRACTICES
FL-0072	TIGER BAY LP	TURBINE, OIL	1850	MMBTU/H	CO	96.4000	LB/H	GOOD COMBUSTION PRACTICES
CA-0613	UNOCAL	TURBINE, GAS (SEE NOTES)	0		CO	10.0000	PPM @ 15% O2	OXIDATION CATALYST
TX-0231	WEST CAMPUS COGENERATION	GAS TURBINES	75	MW (TOTAL POWER)	CO	300.0000	TPY	INTERNAL COMBUSTION CONTROLS
NM-0021	WILLIAMS FIELD SERVICES CO.	TURBINE, GAS-FIRED	11257	HP	CO	50.0000	PPM @ 15% O2	COMBUSTION CONTROL
VA-0184	BERMUDA HUNDRED ENERGY L	TURBINE, COMBUSTION	1175	MMBTU/H NAT. GAS	CO	62.0000	LB/H/UNIT	FURNACE DESIGN
VA-0184	BERMUDA HUNDRED ENERGY L	TURBINE, COMBUSTION	1117	MMBTU/H NO2 FUEL OI	CO	62.0000	LB/H/UNIT	FURNACE DESIGN
NJ-0013	LAKEWOOD COGENERATION, L.	TURBINES (NATURAL GAS) (2	1190	MMBTU/HR (EACH)	CO	0.0260	LB/MMBTU	TURBINE DESIGN
NJ-0013	LAKEWOOD COGENERATION, L.	TURBINES (#2 FUEL OIL) (2)	1190	MMBTU/HR (EACH)	CO	0.0600	LB/MMBTU	TURBINE DESIGN
GA-0063	MID-GEORGIA COGEN.	COMBUSTION TURBINE (2), N	116	MW	CO	10.0000	PPMVD	COMPLETE COMBUSTION
GA-0063	MID-GEORGIA COGEN.	COMBUSTION TURBINE (2), F	116	MW	CO	30.0000	PPMVD	COMPLETE COMBUSTION
FL-0068	ORANGE COGENERATION LP	TURBINE, NATURAL GAS, 2	368	MMBTU/H	CO	30.0000	PPMVD	GOOD COMBUSTION
NY-0046	SARANAC ENERGY COMPANY	TURBINES, COMBUSTION (2)	1123	MMBTU/HR (EACH)	CO	3.0000	PPM	OXIDATION CATALYST
NY-0050	SITHE/INDEPENDENCE POWER (	TURBINES, COMBUSTION (4)	2133	MMBTU/HR (EACH)	CO	13.0000	PPM	COMBUSTION CONTROLS
MD-0019	BALTIMORE GAS & ELECTRIC - F	TURBINE, 140 MW NATURAL (	140	MW	CO	20.0000	PPM @ 15% O2	GOOD COMBUSTION PRACTICES
NY-0072	KAMINE/BESICORP SYRACUSE L	SIEMENS V64.3 GAS TURBINE	650	MMBTU/HR	CO	9.5000	PPM	NO CONTROLS
NY-0081	LILCO SHOREHAM	(3) GE FRAME 7 TURBINES (E	850	MMBTU/HR	CO	10.0000	PPM, 19.7 LB/HR	NO CONTROLS
PA-0083	NORTHERN CONSOLIDATED PO	TURBINES, GAS, 2	35	KW EACH	CO	110.0000	T/YR	OXIDATION CATALYST
MA-0015	PEABODY MUNICIPAL LIGHT PL	TURBINE, 38 MW NATURAL F	412	MMBTU/HR	CO	40.0000	PPM @ 15% O2	GOOD COMBUSTION PRACTICES
PM10								
FL-0078	KISSIMMEE UTILITY AUTHORITY	TURBINE, NATURAL GAS	367	MMBTU/H	PM	9.0000	LB/H	GOOD COMBUSTION PRACTICES
FL-0078	KISSIMMEE UTILITY AUTHORITY	TURBINE, FUEL OIL	371	MMBTU/H	PM	10.0000	LB/H	FUEL SPEC: LOW SULFUR FUEL
FL-0054	LAKE COGEN LIMITED	TURBINE, GAS, 2 EACH	42	MW	PM	0.0065	LB/MMBTU	COMBUSTION CONTROL, FUEL SPEC: CLEAN FUEL
FL-0054	LAKE COGEN LIMITED	TURBINE, OIL, 2 EACH	42	MW	PM	0.0260	LB/MMBTU	COMBUSTION CONTROL, FUEL SPEC: CLEAN FUEL
NM-0024	MILAGRO, WILLIAMS FIELD SER	TURBINE/COGEN, NATURAL (	900	MMCF/DAY	PM10	0.0000	SEE P2 DESC.	COMBUSTION AIR FILTERS; GOOD COMBUSTION PRACTICE AND MAINTENANCE
RI-0010	NARRAGANSETT ELECTRIC/NEV	TURBINE, GAS AND DUCT BU	1360	MMBTU/H EACH	PM	0.0050	LB/MMBTU, GAS	
NV-0017	NEVADA POWER COMPANY, HA	COMBUSTION TURBINE ELEC	600	MW (8 UNITS 75 EACH)	PM10	30.6000	TPY (EACH TURBINE)	PRECISION CONTROL FOR THE COMBUSTOR
NJ-0017	NEWARK BAY COGENERATION F	TURBINES, COMBUSTION, NA	617	MMBTU/HR (EACH)	TSP	0.0060	LB/MMBTU	TURBINE DESIGN
NJ-0017	NEWARK BAY COGENERATION F	TURBINES, COMBUSTION, NA	617	MMBTU/HR (EACH)	PM10	0.0060	LB/MMBTU	TURBINE DESIGN
FL-0068	ORANGE COGENERATION LP	TURBINE, NATURAL GAS, 2	368	MMBTU/H	PM	5.0000	LB/H	GOOD COMBUSTION
MA-0015	PEABODY MUNICIPAL LIGHT PL	TURBINE, 38 MW OIL FIRED	412	MMBTU/HR	PM	0.0500	LB/MMBTU	FUEL SPECIFICATION: NO. 2 LIGHT OIL
CO-0023	PHOENIX POWER PARTNERS	GENERATOR, STEAM, W/ DUC	50	MMBTU/HR	PM10	20.2000	TPY	FUEL SPEC: NATURAL GAS COMBUSTION
NY-0046	SARANAC ENERGY COMPANY	TURBINES, COMBUSTION (2)	1123	MMBTU/HR (EACH)	PM/PM10	0.0062	LB/MMBTU	COMBUSTION CONTROLS
SC-0029	SC ELECTRIC AND GAS COMPAN	INTERNAL COMBUSTION TUR	110	MEGAWATTS	PM	45.0000	LBS/HR	FUEL SPEC: LOW ASH CONTENT FUELS
NY-0045	SELKIRK COGENERATION PART	COMBUSTION TURBINES (2) (	1173	MMBTU/HR (EACH)	PM/PM10	0.0040	LB/MMBTU GAS (BASE)	COMBUSTION CONTROLS AND FUEL SPEC: LOW SULFUR OIL
NY-0045	SELKIRK COGENERATION PART	COMBUSTION TURBINE (79 M	1173	MMBTU/HR	PM/PM10	0.0040	LB/MMBTU, GAS	COMBUSTION CONTROLS AND FUEL SPEC: LOW SULFUR OIL
CO-0017	THERMO INDUSTRIES, LTD.	TURBINE, GAS FIRED, 5 EACH	246	MMBTU/H	PM	25.8000	LB/H	FUEL SPEC: NATURAL GAS FIRED
FL-0072	TIGER BAY LP	TURBINE, GAS	1815	MMBTU/H	PM	9.0000	LB/H	GOOD COMBUSTION PRACTICES
FL-0072	TIGER BAY LP	TURBINE, OIL	1850	MMBTU/H	PM	17.0000	LB/H	GOOD COMBUSTION PRACTICES
TX-0231	WEST CAMPUS COGENERATION	GAS TURBINES	75	MW (TOTAL POWER)	PM10	52.0000	TPY	INTERNAL COMBUSTION CONTROLS
VA-0184	BERMUDA HUNDRED ENERGY L	TURBINE, COMBUSTION	1175	MMBTU/H NAT. GAS	PM	5.0000	E-3 LB/MMBTU	FUEL SPEC: CLEAN BURN FUEL

VA-0184	BERMUDA HUNDRED ENERGY L	TURBINE, COMBUSTION	1175	MMBTU/H NAT. GAS	PM10	5.0000	E-3 LB/MMBTU	FUEL SPEC: CLEAN BURN FUEL
VA-0184	BERMUDA HUNDRED ENERGY L	TURBINE, COMBUSTION	1117	MMBTU/H NO2 FUEL OI	PM	3.5000	E-2 LB/MMBTU	FUEL SPEC: CLEAN BURN FUEL
VA-0184	BERMUDA HUNDRED ENERGY L	TURBINE, COMBUSTION	1117	MMBTU/H NO2 FUEL OI	PM10	3.5000	E-2 LB/MMBTU	FUEL SPEC: CLEAN BURN FUEL
NJ-0013	LAKEWOOD COGENERATION, L	TURBINES (NATURAL GAS) (2	1190	MMBTU/HR (EACH)	PM	0.0023	LB/MMBTU	TURBINE DESIGN
NJ-0013	LAKEWOOD COGENERATION, L	TURBINES (#2 FUEL OIL) (2)	1190	MMBTU/HR (EACH)	PM	0.0260	LB/MMBTU	TURBINE DESIGN
GA-0063	MID-GEORGIA COGEN.	COMBUSTION TURBINE (2), N	116	MW	PM	18.0000	LB/HR	CLEAN FUEL
GA-0063	MID-GEORGIA COGEN.	COMBUSTION TURBINE (2), F	116	MW	PM	55.0000	LB/HR	CLEAN FUEL
FL-0068	ORANGE COGENERATION LP	TURBINE, NATURAL GAS, 2	368	MMBTU/H	PM	5.0000	LB/H	GOOD COMBUSTION
NY-0046	SARANAC ENERGY COMPANY	TURBINES, COMBUSTION (2)	1123	MMBTU/HR (EACH)	PM/PM10	0.0062	LB/MMBTU	COMBUSTION CONTROLS
NY-0072	KAMINE/BESICORP SYRACUSE L	SIEMENS V64.3 GAS TURBINE	650	MMBTU/HR	PM,PM10	0.0080	LB/MMBTU, 5.8 LB/HR	FUEL SPEC: SULFUR CONTENT NOT TO EXCEED 0.15% BY WEIGHT
NY-0081	LILCO SHOREHAM	(3) GE FRAME 7 TURBINES (E	850	MMBTU/HR	PM10	0.0120	LB/MMBTU, 10.2 LB/HR	NO CONTROLS
MN-0022	LSP-COTTAGE GROVE, L.P.	COMBUSTION TURBINE/GENE	1970	MMBTU/HR	PM10	10.7000	LB/HR GAS	FUEL SELECTION; GOOD COMBUSTION
MA-0015	PEABODY MUNICIPAL LIGHT PL	TURBINE, 38 MW OIL FIRED	412	MMBTU/HR	PM	0.0500	LB/MMBTU	FUEL SPECIFICATION: NO. 2 LIGHT OIL
SO2								
FL-0078	KISSIMMEE UTILITY AUTHORITY	TURBINE, FUEL OIL	371	MMBTU/H	SO2	20.0000	LB/H	FUEL SPEC: LOW SULFUR FUEL
NV-0017	NEVADA POWER COMPANY, HA	COMBUSTION TURBINE ELEC	600	MW (8 UNITS 75 EACH)	SO2	27.1000	TPY (EACH TURBINE)	FUEL SPEC: S IN #2 DISTILLATE LIMITED TO 0.05%
NJ-0017	NEWARK BAY COGENERATION	TURBINES, COMBUSTION, NA	617	MMBTU/HR (EACH)	SO2	0.0026	LB/MMBTU	FUEL SPEC: USE OF NATURAL GAS
CO-0023	PHOENIX POWER PARTNERS	GENERATOR, STEAM, W/ DUC	50	MMBTU/HR	SO2	0.9500	TPY	FUEL SPEC: NATURAL GAS COMBUSTION
SC-0029	SC ELECTRIC AND GAS COMPAN	INTERNAL COMBUSTION TUR	110	MEGAWATTS	SO2	630.0000	LBS/HR	FUEL SPEC: LOW SULFUR CONTENT FUELS
NY-0045	SELKIRK COGENERATION PART	COMBUSTION TURBINES (2) (	1173	MMBTU/HR (EACH)	SO2	0.2000	% SULFUR OIL	FUEL SPEC: LOW SULFUR OIL
NY-0045	SELKIRK COGENERATION PART	COMBUSTION TURBINE (79 M	1173	MMBTU/HR	SO2	0.2000	% SULFUR OIL	FUEL SPEC: LOW SULFUR OIL
MD-0017	SOUTHERN MARYLAND ELECTR	TURBINE, OIL FIRED ELECTRI	90	MW	SO2	0.0000		FUEL SPEC: FUEL LIMITED AND 0.3 % S
CO-0017	THERMO INDUSTRIES, LTD.	TURBINE, GAS FIRED, 5 EACH	246	MMBTU/H	SOX	1.5000	LB/H	
TX-0231	WEST CAMPUS COGENERATION	GAS TURBINES	75	MW (TOTAL POWER)	SO2	2.8000	TPY	INTERNAL COMBUSTION CONTROLS
VA-0184	BERMUDA HUNDRED ENERGY L	TURBINE, COMBUSTION	1175	MMBTU/H NAT. GAS	SO2	9.0000	E-4 LB/MMBTU	FUEL SPEC: LOW SULFUR FUEL
VA-0184	BERMUDA HUNDRED ENERGY L	TURBINE, COMBUSTION	1117	MMBTU/H NO2 FUEL OI	SO2	6.8000	E-2 LB/MMBTU	FUEL SPEC: LOW SULFUR OIL
NJ-0013	LAKEWOOD COGENERATION, L	TURBINES (NATURAL GAS) (2	1190	MMBTU/HR (EACH)	SO2	0.0069	LB/MMBTU	FUEL SPEC: NAT GAS/LOW SULFUR NO.2 OIL
NJ-0013	LAKEWOOD COGENERATION, L	TURBINES (#2 FUEL OIL) (2)	1190	MMBTU/HR (EACH)	SO2	0.2100	LB/MMBTU	FUEL SPEC: USE OF LOW SULFUR NO.2 OIL
GA-0063	MID-GEORGIA COGEN.	COMBUSTION TURBINE (2), F	116	MW	SO2	0.0500	% SULFUR IN FUEL	FUEL SPEC: VERY LOW SULFUR IN FUEL
NY-0050	SITHE/INDEPENDENCE POWER	TURBINES, COMBUSTION (4)	2133	MMBTU/HR (EACH)	SO2	0.0000		FUEL SPEC: USE OF NATURAL GAS
MD-0019	BALTIMORE GAS & ELECTRIC -	TURBINE, 140 MW OIL FIRED	140	MW	SO2	87.0000	LB/HR	FUEL SPEC: LOW SULFUR OIL (0.05%)
NY-0047	PASNY/HOLTSVILLE COMBINED	TURBINE, COMBUSTION GAS	1146	MMBTU/HR (GAS)*	SO2	0.2000	% SULFUR OIL	FUEL SPEC: LOW SULFUR OIL
FL-0078	KISSIMMEE UTILITY AUTHORITY	TURBINE, FUEL OIL	371	MMBTU/H	SO2	20.0000	LB/H	FUEL SPEC: LOW SULFUR FUEL
NV-0017	NEVADA POWER COMPANY, HA	COMBUSTION TURBINE ELEC	600	MW (8 UNITS 75 EACH)	SO2	27.1000	TPY (EACH TURBINE)	FUEL SPEC: S IN #2 DISTILLATE LIMITED TO 0.05%
NJ-0017	NEWARK BAY COGENERATION	TURBINES, COMBUSTION, NA	617	MMBTU/HR (EACH)	SO2	0.0026	LB/MMBTU	FUEL SPEC: USE OF NATURAL GAS
CO-0023	PHOENIX POWER PARTNERS	GENERATOR, STEAM, W/ DUC	50	MMBTU/HR	SO2	0.9500	TPY	FUEL SPEC: NATURAL GAS COMBUSTION
SC-0029	SC ELECTRIC AND GAS COMPAN	INTERNAL COMBUSTION TUR	110	MEGAWATTS	SO2	630.0000	LBS/HR	FUEL SPEC: LOW SULFUR CONTENT FUELS
NY-0045	SELKIRK COGENERATION PART	COMBUSTION TURBINES (2) (	1173	MMBTU/HR (EACH)	SO2	0.2000	% SULFUR OIL	FUEL SPEC: LOW SULFUR OIL
NY-0045	SELKIRK COGENERATION PART	COMBUSTION TURBINE (79 M	1173	MMBTU/HR	SO2	0.2000	% SULFUR OIL	FUEL SPEC: LOW SULFUR OIL
MD-0017	SOUTHERN MARYLAND ELECTR	TURBINE, OIL FIRED ELECTRI	90	MW	SO2	0.0000		FUEL SPEC: FUEL LIMITED AND 0.3 % S
CO-0017	THERMO INDUSTRIES, LTD.	TURBINE, GAS FIRED, 5 EACH	246	MMBTU/H	SOX	1.5000	LB/H	
TX-0231	WEST CAMPUS COGENERATION	GAS TURBINES	75	MW (TOTAL POWER)	SO2	2.8000	TPY	INTERNAL COMBUSTION CONTROLS
VA-0184	BERMUDA HUNDRED ENERGY L	TURBINE, COMBUSTION	1175	MMBTU/H NAT. GAS	SO2	9.0000	E-4 LB/MMBTU	FUEL SPEC: LOW SULFUR FUEL
VA-0184	BERMUDA HUNDRED ENERGY L	TURBINE, COMBUSTION	1117	MMBTU/H NO2 FUEL OI	SO2	6.8000	E-2 LB/MMBTU	FUEL SPEC: LOW SULFUR OIL
NJ-0013	LAKEWOOD COGENERATION, L	TURBINES (NATURAL GAS) (2	1190	MMBTU/HR (EACH)	SO2	0.0069	LB/MMBTU	FUEL SPEC: NAT GAS/LOW SULFUR NO.2 OIL
NJ-0013	LAKEWOOD COGENERATION, L	TURBINES (#2 FUEL OIL) (2)	1190	MMBTU/HR (EACH)	SO2	0.2100	LB/MMBTU	FUEL SPEC: USE OF LOW SULFUR NO.2 OIL
GA-0063	MID-GEORGIA COGEN.	COMBUSTION TURBINE (2), F	116	MW	SO2	0.0500	% SULFUR IN FUEL	FUEL SPEC: VERY LOW SULFUR IN FUEL
NY-0050	SITHE/INDEPENDENCE POWER	TURBINES, COMBUSTION (4)	2133	MMBTU/HR (EACH)	SO2	0.0000		FUEL SPEC: USE OF NATURAL GAS
MD-0019	BALTIMORE GAS & ELECTRIC -	TURBINE, 140 MW OIL FIRED	140	MW	SO2	87.0000	LB/HR	FUEL SPEC: LOW SULFUR OIL (0.05%)
NY-0047	PASNY/HOLTSVILLE COMBINED	TURBINE, COMBUSTION GAS	1146	MMBTU/HR (GAS)*	SO2	0.2000	% SULFUR OIL	FUEL SPEC: LOW SULFUR OIL
LA-0086	INTERNATIONAL PAPER	TURBINE/HRSG, GAS COGEN	338	MM BTU/HR TURBINE	VOC	3.8000	LB/HR COMBINED	COMBUSTION CONTROLS, FUEL SELECTION
RI-0010	NARRAGANSETT ELECTRIC/NEW	TURBINE, GAS AND DUCT BU	4360	MMBTU/H EACH	VOC	5.0000	PPM @ 15% O2	
NJ-0017	NEWARK BAY COGENERATION	TURBINES, COMBUSTION, NA	617	MMBTU/HR (EACH)	VOC	4.0000	PPMDV	TURBINE DESIGN
PA-0083	NORTHEAN CONSOLIDATED PO	TURBINES, GAS, 2	35	KW EACH	VOC	105.0000	PPM @ 15% O2	OXIDATION CATALYST
FL-0068	ORANGE COGENERATION LP	TURBINE, NATURAL GAS, 2	368	MMBTU/H	VOC	10.0000	PPMVD	GOOD COMBUSTION
CO-0023	PHOENIX POWER PARTNERS	GENERATOR, STEAM, W/ DUC	50	MMBTU/HR	VOC	24.0900	TPY	FUEL SPEC: NATURAL GAS COMBUSTION
NY-0046	SARANAC ENERGY COMPANY	TURBINES, COMBUSTION (2)	1123	MMBTU/HR (EACH)	VOC	0.0045	LB/MMBTU	OXIDATION CATALYST
SC-0029	SC ELECTRIC AND GAS COMPAN	INTERNAL COMBUSTION TUR	110	MEGAWATTS	VOC	10.0000	LBS/HR	GOOD COMBUSTION PRACTICES
CO-0017	THERMO INDUSTRIES, LTD.	TURBINE, GAS FIRED, 5 EACH	246	MMBTU/H	VOC	16.7000	LB/H	
TX-0231	WEST CAMPUS COGENERATION	GAS TURBINES	75	MW (TOTAL POWER)	VOC	38.0000	TPY	INTERNAL COMBUSTION CONTROLS
NM-0021	WILLIAMS FIELD SERVICES CO.	TURBINE, GAS-FIRED	11257	HP	VOC	25.0000	PPM @ 15% O2	COMBUSTION CONTROL
NY-0072	KAMINE/BESICORP SYRACUSE L	SIEMENS V64.3 GAS TURBINE	650	MMBTU/HR	VOC	0.0070	LB/MMBTU, 4.6 LB/HR	NO CONTROLS
MN-0022	LSP-COTTAGE GROVE, L.P.	COMBUSTION TURBINE/GENE	1970	MMBTU/HR	VOC	19.0000	LB/HR GAS	FUEL SELECTION, GOOD COMBUSTION
PA-0083	NORTHERN CONSOLIDATED PO	TURBINES, GAS, 2	34.60	KW EACH	VOC	105.0000	PPM @ 15% O2	OXIDATION CATALYST

ABLCID	FACILITY	PROCESS	THRUPUT	THRUPUTUNT	POLLUTANT	PRIMEMISS	PRIMEUNIT	CTRLDESC
AK-0026	COMINCO ALASKA INC.	INCINERATOR (CONSTRUCTION CAMP)	0.00		PM	1.5000	LB/YR	

APPENDIX C
CONTROL COSTS FOR BACT

Table 4-3
Yukon Pacific Corporation
GE Frame 5 Gas Turbine NO_x BACT Analysis
Selective Catalytic Reduction (SCR)

Capital Costs	
DIRECT COSTS:	
(1) Purchased Equipment Costs:	
(a) Basic Equipment (A)	$1,737,200
(a) Out-of-Scope Auxiliaries (0.35 A)	$0
(b) Instruments and Controls (0.10 A)	$173,700
(c) Freight and Taxes (0.08 A)	$152,900
Total Equipment Cost (B):	$2,063,800
(2) Direct Installation Costs:	
(a) Foundations and Supports (0.08 B)	$454,000
(b) Erection and Handling (0.14 B)	$784,200
(c) Electrical (0.04 B)	$227,000
(d) Piping (0.20 B)	$103,200
(e) Insulation (0.10 B)	$61,900
(f) Painting (0.01 B)	$61,900
(g) Building and Site Preparation (as required)	not included
Total Direct Installation Cost (0.57 B + (g))	**$1,692,200**
Total Direct Costs (TDC) (1) + (2)	**$3,756,000**
INDIRECT COSTS:	
(1) Indirect Field Costs (0.15 B)	$557,200
(2) Engineering Costs (0.05 B)	$846,200
(3) Start-up (0.02 B)	$103,200
(4) Performance test (0.01 B)	$61,900
Total Indirect Costs (TIC) (0.33 B)	**$1,568,500**
Contingency (30% of Total Direct and Indirect Costs)	**$1,597,400**
6-Year Escalation (15% of Total Direct and Indirect Costs)	**$798,700**
TOTAL INSTALLED CAPITAL COSTS (TCC)	**$7,720,600**

Table 4-4
Yukon Pacific Corporation
GE Frame 5 Gas Turbine NO_x BACT Analysis
Selective Catalytic Reduction (SCR)

Annualized Costs	
DIRECT COSTS:	
(1) Operating Labor (1,095 hrs/yr @ $25/hr)	$27,400
(2) Supervisory Labor (0.15 C)	$4,100
(3) Maintenance Labor (1,095 hrs/yr @ $25/hr)	$27,400
(4) Replacement Parts and Materials (0.10 * (1a+1b+1c))	$191,100
(5) Utilities	
(a) Electricity	not estimated
(b) Steam	$0
(6) Chemicals (131,400 lbs/yr @ $250/ton)	$16,400
(7) Catalyst Replacement (one layer every 18 months)	$315,200
Total Direct Costs:	**$581,600**
INDIRECT COSTS:	
(1) Overhead 0.80 (1.15 C + 0.04 TDC)	$145,400
(2) Property Tax (0.01 TCC)	$77,200
(3) Insurance (0.01 TCC)	$77,200
(4) G&A Charges (0.02 TCC)	$154,400
(5) Capital Recovery (0.163 TCC)	$1,258,500
Total Indirect Costs:	**$1,712,700**
TOTAL ANNUALIZED COSTS:	**$2,294,300**
Tons Per Year of NO_x Removed	**104**
COST EFFECTIVENESS (Dollars per ton of NO_x Removed)	**$22,100**

Table 4-5
Yukon Pacific Corporation
Solar Mars 90 Gas Turbine NO_x BACT Analysis (with Duct Burner)
Selective Catalytic Reduction (SCR)

Capital Costs	
DIRECT COSTS:	
(1) Purchased Equipment Costs:	
(a) Basic Equipment (A)	$609,300
(a) Out-of-Scope Auxiliaries (0.35 A)	$0
(b) Instruments and Controls (0.10 A)	$60,900
(c) Freight and Taxes (0.08 A)	$53,600
Total Equipment Cost (B):	$723,800
(2) Direct Installation Costs:	
(a) Foundations and Supports (0.08 B)	$159,200
(b) Erection and Handling (0.14 B)	$275,000
(c) Electrical (0.04 B)	$79,600
(d) Piping (0.20 B)	$36,200
(e) Insulation (0.10 B)	$21,700
(f) Painting (0.01 B)	$21,700
(g) Building and Site Preparation (as required)	not included
Total Direct Installation Cost (0.57 B + (g))	$593,400
Total Direct Costs (TDC) (1) + (2)	$1,317,200
INDIRECT COSTS:	
(1) Indirect Field Costs (0.15 B)	$195,400
(2) Engineering Costs (0.05 B)	$296,800
(3) Start-up (0.02 B)	$36,200
(4) Performance test (0.01 B)	$21,700
Total Indirect Costs (TIC) (0.33 B)	**$550,100**
Contingency (30% of Total Direct and Indirect Costs)	**$560,200**
6-Year Escalation (15% of Total Direct and Indirect Costs)	**$280,100**
TOTAL INSTALLED CAPITAL COSTS (TCC)	**$2,707,600**

Table 4-6
Yukon Pacific Corporation
Solar Mars 90 Gas Turbine NO_x BACT Analysis (with Duct Burner)
Selective Catalytic Reduction (SCR)

Annualized Costs	
DIRECT COSTS:	
(1) Operating Labor (1,095 hrs/yr @ $25/hr)	$27,400
(2) Supervisory Labor (0.15 C)	$4,100
(3) Maintenance Labor (1,095 hrs/yr @ $25/hr)	$27,400
(4) Replacement Parts and Materials (0.10 * (1a+1b+1c))	$67,000
(5) Utilities	
(a) Electricity	not estimated
(b) Steam	$0
(6) Chemicals (40,296 lbs/yr @ $250/ton)	$5,000
(7) Catalyst Replacement (one layer every 18 months)	$97,600
Total Direct Costs:	**$228,500**
INDIRECT COSTS:	
(1) Overhead 0.80 (1.15 C + 0.04 TDC)	$67,400
(2) Property Tax (0.01 TCC)	$27,100
(3) Insurance (0.01 TCC)	$27,100
(4) G&A Charges (0.02 TCC)	$54,200
(5) Capital Recovery (0.163 TCC)	$441,300
Total Indirect Costs:	**$617,100**
TOTAL ANNUALIZED COSTS:	**$845,600**
Tons Per Year of NO_x Removed	55
COST EFFECTIVENESS (Dollars per ton of NO_x Removed)	**$15,400**

Table 4-7
Yukon Pacific Corporation
EGT Typhoon Gas Turbine NO_x BACT Analysis
Selective Catalytic Reduction (SCR)

Capital Costs	
DIRECT COSTS:	
(1) Purchased Equipment Costs:	
(a) Basic Equipment (A)	$348,400
(a) Out-of-Scope Auxiliaries (0.35 A)	$0
(b) Instruments and Controls (0.10 A)	$34,800
(c) Freight and Taxes (0.08 A)	$30,700
Total Equipment Cost (B):	$413,900
(2) Direct Installation Costs:	
(a) Foundations and Supports (0.08 B)	$91,100
(b) Erection and Handling (0.14 B)	$157,300
(c) Electrical (0.04 B)	$45,500
(d) Piping (0.20 B)	$20,700
(e) Insulation (0.10 B)	$12,400
(f) Painting (0.01 B)	$12,400
(g) Building and Site Preparation (as required)	not included
Total Direct Installation Cost (0.57 B + (g))	**$339,400**
Total Direct Costs (TDC) (1) + (2)	**$753,300**
INDIRECT COSTS:	
(1) Indirect Field Costs (0.15 B)	$111,800
(2) Engineering Costs (0.05 B)	$169,700
(3) Start-up (0.02 B)	$20,700
(4) Performance test (0.01 B)	$12,400
Total Indirect Costs (TIC) (0.33 B)	**$314,600**
Contingency (30% of Total Direct and Indirect Costs)	**$320,400**
6-Year Escalation (15% of Total Direct and Indirect Costs)	**$160,200**
TOTAL INSTALLED CAPITAL COSTS (TCC)	**$1,548,500**

Table 4-8
Yukon Pacific Corporation
EGT Typhoon Gas Turbine NO_x BACT Analysis
Selective Catalytic Reduction (SCR)

Annualized Costs	
DIRECT COSTS:	
(1) Operating Labor (1,095 hrs/yr @ $25/hr)	$27,400
(2) Supervisory Labor (0.15 C)	$4,100
(3) Maintenance Labor (1,095 hrs/yr @ $25/hr)	$27,400
(4) Replacement Parts and Materials (0.10 * (1a+1b+1c))	$38,300
(5) Utilities	
(a) Electricity	not estimated
(b) Steam	$0
(6) Chemicals (19,272 lbs/yr @ $250/ton)	$2,400
(7) Catalyst Replacement (one layer every 18 months)	$46,200
Total Direct Costs:	**$145,800**
INDIRECT COSTS:	
(1) Overhead 0.80 (1.15 C + 0.04 TDC)	$49,300
(2) Property Tax (0.01 TCC)	$15,500
(3) Insurance (0.01 TCC)	$15,500
(4) G&A Charges (0.02 TCC)	$31,000
(5) Capital Recovery (0.163 TCC)	$252,400
Total Indirect Costs:	**$363,700**
TOTAL ANNUALIZED COSTS:	**$509,500**
Tons Per Year of NO_x Removed	**14**
COST EFFECTIVENESS (Dollars per ton of NO_x Removed)	**$36,400**

Table 4-9
Yukon Pacific Corporation
Drier Reactivation Heaters NO_x BACT Analysis
Low NO_x Burners

Capital Costs	
DIRECT COSTS:	
(1) Purchased Equipment Costs:	
(a) Basic Equipment (A) (From John Zink (Anderson 1996))	$4,500
(a) Out-of-Scope Auxiliaries (0.35 A)	$0
(b) Instruments and Controls (0.10 A)	$0
(c) Freight and Taxes (0.08 A)	$0
Total Equipment Cost (B):	$0
(2) Direct Installation Costs:	
(a) Foundations and Supports (0.08 B)	$0
(b) Erection and Handling (0.14 B)	$0
(c) Electrical (0.04 B)	$0
(d) Piping (0.20 B)	$0
(e) Insulation (0.10 B)	$0
(f) Painting (0.01 B)	$0
(g) Building and Site Preparation (as required)	not required
Total Direct Installation Cost (0.57 B + (g))	$0
Total Direct Costs (TDC) (1) + (2)	$0
INDIRECT COSTS:	
(1) Indirect Field Costs (0.15 B)	$0
(2) Engineering Costs (0.05 B)	$0
(3) Start-up (0.02 B)	$0
(4) Performance test (0.01 B)	$0
Total Direct and Indirect Costs	$4,500
Contingency (30 % of Total Direct and Indirect Costs)	$1,400
6-Year Escalatin (15% of Total Direct and Indirect Costs)	$700
TOTAL INSTALLED CAPITAL COSTS (TCC)	$6,600

Table 4-10
Yukon Pacific Corporation
Drier Reactivation Heaters NO_x BACT Analysis
Low NO_x Burners

Annualized Costs	
DIRECT COSTS:	
(1) Operating Labor	$0
(2) Supervisory Labor (0.15 C)	$0
(3) Maintenance Labor	$0
(4) Replacement Parts and Materials (0.10 * (1a+1b+1c))	$0
(5) Utilities	
(a) Electricity	$0
(b) Steam	$0
(6) Chemicals	$0
Total Direct Costs:	$0
INDIRECT COSTS:	
(1) Overhead 0.80 (1.15 C + 0.04 TDC)	$0
(2) Property Tax (0.01 TCC)	$100
(3) Insurance (0.01 TCC)	$100
(4) G&A Charges (0.02 TCC)	$100
(5) Capital Recovery (0.163 TCC)	$1,100
Total Indirect Costs:	$1,400
TOTAL ANNUALIZED COSTS:	$1,400
Tons Per Year of NO_x Removed	0.2
COST EFFECTIVENESS (Dollars per ton of NO_x Removed)	$7,000

Table 4-11
Yukon Pacific Corporation
Steam Boiler NO_x BACT Analysis
Low NO_x Burner

Capital Costs	
DIRECT COSTS:	
(1) Purchased Equipment Costs:	
(a) Basic Equipment (A) (From John Zink (Anderson 1996))	$30,000
(a) Out-of-Scope Auxiliaries (0.35 A)	$0
(b) Instruments and Controls (0.10 A)	$0
(c) Freight and Taxes (0.08 A)	$0
Total Equipment Cost (B):	$0
(2) Direct Installation Costs:	
(a) Foundations and Supports (0.08 B)	$0
(b) Erection and Handling (0.14 B)	$0
(c) Electrical (0.04 B)	$0
(d) Piping (0.20 B)	$0
(e) Insulation (0.10 B)	$0
(f) Painting (0.01 B)	$0
(g) Building and Site Preparation (as required)	not required
Total Direct Installation Cost (0.57 B + (g))	$0
Total Direct Costs (TDC) (1) + (2)	$0
INDIRECT COSTS:	
(1) Indirect Field Costs (0.15 B)	$0
(2) Engineering Costs (0.05 B)	$0
(3) Start-up (0.02 B)	$0
(4) Performance test (0.01 B)	$0
Total Direct and Indirect Costs	**$30,000**
Contingency (30% of Total Direct and Indirect Costs)	**$9,000**
6-Year Escalation (15% of Total Direct and Indirect Costs)	**$4,500**
TOTAL INSTALLED CAPITAL COSTS (TCC)	**$43,500**

Table 4-12
Yukon Pacific Corporation
Steam Boiler NO_x BACT Analysis
Low NO_x Burner

Annualized Costs	
DIRECT COSTS:	
(1) Operating Labor	$0
(2) Supervisory Labor (0.15 C)	$0
(3) Maintenance Labor	$0
(4) Replacement Parts and Materials (0.10 * (1a+1b+1c))	$0
(5) Utilities	
(a) Electricity	$0
(b) Steam	$0
(6) Chemicals	$0
Total Direct Costs:	**$0**
INDIRECT COSTS:	
(1) Overhead 0.80 (1.15 C + 0.04 TDC)	$0
(2) Property Tax (0.01 TCC)	$400
(3) Insurance (0.01 TCC)	$400
(4) G&A Charges (0.02 TCC)	$900
(5) Capital Recovery (0.163 TCC)	$7,100
Total Indirect Costs:	**$8,800**
TOTAL ANNUALIZED COSTS:	**$8,800**
Tons Per Year of NO_x Removed	3
COST EFFECTIVENESS (Dollars per ton of NO_x Removed)	**$2,900**

Table 5-3
Yukon Pacific Corporation
Frame 5 Gas Turbine CO BACT Analysis
Selective Catalytic Oxidation

Capital Costs	
DIRECT COSTS:	
(1) Purchased Equipment Costs:	
(a) Basic Equipment (A)	$0
(a) Out-of-Scope Auxiliaries (0.35 A)	$0
(b) Instruments and Controls (0.10 A)	$0
(c) Freight and Taxes (0.08 A)	$0
Total Equipment Cost (B):	$0
(2) Direct Installation Costs:	
(a) Foundations and Supports (0.08 B)	$0
(b) Erection and Handling (0.14 B)	$0
(c) Electrical (0.04 B)	$0
(d) Piping (0.20 B)	$0
(e) Insulation (0.10 B)	$0
(f) Painting (0.01 B)	$0
(g) Building and Site Preparation (as required)	not required
Total Direct Installation Cost (0.57 B + (g))	$0
Total Direct Costs (TDC) (1) + (2)	$0
INDIRECT COSTS:	
(1) Indirect Field Costs (0.15 B)	$0
(2) Engineering Costs (0.05 B)	$0
(3) Start-up (0.02 B)	$0
(4) Performance test (0.01 B)	$0
Total Direct and Indirect Costs (From EPA COST-AIR (EPA 1966))	**$3,996,200**
Contingency (30% of Total Direct and Indirect Costs)	**$1,198,900**
6-Year Escalation (15% of Total Direct and Indirect Costs)	**$599,400**
TOTAL INSTALLED CAPITAL COSTS (TCC)	**$5,794,500**

Table 5-4
Yukon Pacific Corporation
Frame 5 Gas Turbine CO BACT Analysis
Selective Catalytic Oxidation (SCO)

Annualized Costs	
DIRECT COSTS:	
(1) Operating Labor (0.5 hr/shift @ $25/hr)	$13,688
(2) Supervisory Labor (0.15 C)	$2,100
(3) Maintenance Labor (0.5 hr/shift @ $27.5/hr)	$15,056
(4) Replacement Parts and Materials (0.10 * (1a+1b+1c))	$15,056
(5) Utilities	
(a) Electricity	$849,690
(b) Steam	$0
(6) Chemicals	$0
(7) Catalyst Replacement Cost	$165,816
Total Direct Costs:	**$895,590**
INDIRECT COSTS:	
(1) Overhead 0.80 (1.15 C + 0.04 TDC)	$27,512
(2) Property Tax (0.01 TCC)	$40,000
(3) Insurance (0.01 TCC)	$40,000
(4) G&A Charges (0.02 TCC)	$79,900
(5) Capital Recovery (0.163 TCC)	$944,500
Total Indirect Costs:	**$1,203,700**
TOTAL ANNUALIZED COSTS:	**$2,099,300**
Tons Per Year of CO Removed	59 3.8 LSD
COST EFFECTIVENESS (Dollars per ton of CO Removed)	**$35,600**
$/VOC removed	1,104,894

Table 5-5
Yukon Pacific Corporation
Solar Mars 90 Gas Turbine CO BACT Analysis
Selective Catalytic Oxidation

Capital Costs	
DIRECT COSTS:	
(1) Purchased Equipment Costs:	
(a) Basic Equipment (A)	$0
(a) Out-of-Scope Auxiliaries (0.35 A)	$0
(b) Instruments and Controls (0.10 A)	$0
(c) Freight and Taxes (0.08 A)	$0
Total Equipment Cost (B):	$0
(2) Direct Installation Costs:	
(a) Foundations and Supports (0.08 B)	$0
(b) Erection and Handling (0.14 B)	$0
(c) Electrical (0.04 B)	$0
(d) Piping (0.20 B)	$0
(e) Insulation (0.10 B)	$0
(f) Painting (0.01 B)	$0
(g) Building and Site Preparation (as required)	not required
Total Direct Installation Cost (0.57 B + (g))	$0
Total Direct Costs (TDC) (1) + (2)	$0
INDIRECT COSTS:	
(1) Indirect Field Costs (0.15 B)	$0
(2) Engineering Costs (0.05 B)	$0
(3) Start-up (0.02 B)	$0
(4) Performance test (0.01 B)	$0
Total Direct and Indirect Costs (From EPA COST-AIR (EPA 1996))	**$1,535,920**
Contingency (30% of Total Direct and Indirect Costs)	**$460,800**
6-Year Escalation (15% of Total Direct and Indirect Costs)	**$230,400**
TOTAL INSTALLED CAPITAL COSTS (TCC)	**$2,227,120**

Table 5-6
Yukon Pacific Corporation
Solar Mars 90 Gas Turbine CO BACT Analysis
Selective Catalytic Oxidation (SCO)

Annualized Costs	
DIRECT COSTS:	
(1) Operating Labor (0.5 hr/shift @ $25/hr)	$13,688
(2) Supervisory Labor (0.15 C)	$2,100
(3) Maintenance Labor (0.5 hr/shift @ $27.5/hr)	$15,056
(4) Replacement Parts and Materials (0.10 * (1a+1b+1c))	$15,056
(5) Utilities	
(a) Electricity	$262,666
(b) Steam	$0
(6) Chemicals	$0
(7) Catalyst Replacement Cost	$51,259
Total Direct Costs:	$308,566
INDIRECT COSTS:	
(1) Overhead 0.80 (1.15 C + 0.04 TDC)	$27,512
(2) Property Tax (0.01 TCC)	$15,400
(3) Insurance (0.01 TCC)	$15,400
(4) G&A Charges (0.02 TCC)	$30,700
(5) Capital Recovery (0.163 TCC)	$363,000
Total Indirect Costs:	$479,600
TOTAL ANNUALIZED COSTS:	$788,200
Tons Per Year of CO Removed Tons of VOC removed	62
COST EFFECTIVENESS (Dollars per ton of CO Removed)	**$12,700**

Table 5-6
Yukon Pacific Corporation
Solar Mars 90 Gas Turbine CO BACT Analysis
Selective Catalytic Oxidation (SCO)

Annualized Costs	
DIRECT COSTS:	
(1) Operating Labor (0.5 hr/shift @ $25/hr)	$13,688
(2) Supervisory Labor (0.15 C)	$2,100
(3) Maintenance Labor (0.5 hr/shift @ $27.5/hr)	$15,056
(4) Replacement Parts and Materials (0.10 * (1a+1b+1c))	$15,056
(5) Utilities	
(a) Electricity	$262,666
(b) Steam	$0
(6) Chemicals	$0
(7) Catalyst Replacement Cost	$51,259
Total Direct Costs:	$308,566
INDIRECT COSTS:	
(1) Overhead 0.80 (1.15 C + 0.04 TDC)	$27,512
(2) Property Tax (0.01 TCC)	$15,400
(3) Insurance (0.01 TCC)	$15,400
(4) G&A Charges (0.02 TCC)	$30,700
(5) Capital Recovery (0.163 TCC)	$363,000
Total Indirect Costs:	$479,600
TOTAL ANNUALIZED COSTS:	$788,200
Tons Per Year of CO Removed	62
Tons of VOC Removed	1.65/2
COST EFFECTIVENESS (Dollars per ton of CO Removed)	$12,700
$/VOC removed	$650,000 VOC

Table 5-7
Yukon Pacific Corporation
EGT Typhoon Gas Turbine CO BACT Analysis
Selective Catalytic Oxidation

Capital Costs	
DIRECT COSTS:	
(1) Purchased Equipment Costs:	
(a) Basic Equipment (A)	$0
(a) Out-of-Scope Auxiliaries (0.35 A)	$0
(b) Instruments and Controls (0.10 A)	$0
(c) Freight and Taxes (0.08 A)	$0
Total Equipment Cost (B):	$0
(2) Direct Installation Costs:	
(a) Foundations and Supports (0.08 B)	$0
(b) Erection and Handling (0.14 B)	$0
(c) Electrical (0.04 B)	$0
(d) Piping (0.20 B)	$0
(e) Insulation (0.10 B)	$0
(f) Painting (0.01 B)	$0
(g) Building and Site Preparation (as required)	not required
Total Direct Installation Cost (0.57 B + (g))	$0
Total Direct Costs (TDC) (1) + (2)	$0
INDIRECT COSTS:	
(1) Indirect Field Costs (0.15 B)	$0
(2) Engineering Costs (0.05 B)	$0
(3) Start-up (0.02 B)	$0
(4) Performance test (0.01 B)	$0
Total Direct and Indirect Costs (From EPA COST-AIR (EPA 1996))	**$1,014,484**
Contingency (30% of Total Direct and Indirect Costs)	**$304,300**
6-Year Escalation (15% of Total Direct and Indirect Costs)	**$152,200**
TOTAL INSTALLED CAPITAL COSTS (TCC)	**$1,471,000**

Table 5-8
Yukon Pacific Corporation
EGT Typhoon Gas Turbine CO BACT Analysis
Selective Catalytic Oxidation (SCO)

Annualized Costs	
DIRECT COSTS:	
(1) Operating Labor (0.5 hr/shift @ $25/hr)	$13,688
(2) Supervisory Labor (0.15 C)	$2,100
(3) Maintenance Labor (0.5 hr/shift @ $27.5/hr)	$15,056
(4) Replacement Parts and Materials (0.10 * (1a+1b+1c))	$15,056
(5) Utilities	
(a) Electricity	$123,075
(b) Steam	$0
(6) Chemicals	$0
(7) Catalyst Replacement Cost	$24,018
Total Direct Costs:	**$168,975**
INDIRECT COSTS:	
(1) Overhead 0.80 (1.15 C + 0.04 TDC)	$27,512
(2) Property Tax (0.01 TCC)	$14,700
(3) Insurance (0.01 TCC)	$14,700
(4) G&A Charges (0.02 TCC)	$29,400
(5) Capital Recovery (0.163 TCC)	$239,800
Total Indirect Costs:	**$326,100**
TOTAL ANNUALIZED COSTS:	**$495,100**
Tons Per Year of CO Removed	12
Tons per year of VOC removed	4.3 (.5)
COST EFFECTIVENESS (Dollars per ton of CO Removed)	**$41,300**

$/voc removed. $225,045

Table 1
Yukon Pacific Corporation
Steam Boiler NOx BACT Analysis (14 % Load)
Selective Catalytic Reduction (SCR)

Capital Costs	
DIRECT COSTS:	
(1) Purchased Equipment Costs:	
(a) Basic Equipment (A)	$246,070
(a) Out-of-Scope Auxiliaries (including boiler modifications) (0.35 A)	$86,100
(b) Instruments and Controls (0.10 A)	$24,600
(c) Freight and Taxes (0.08 A)	$28,500
Total Equipment Cost (B):	$385,270
(2) Direct Installation Costs:	
(a) Foundations and Supports (0.08 B)	$84,800
(b) Erection and Handling (0.14 B)	$146,400
(c) Electrical (0.04 B)	$42,400
(d) Piping (0.20 B)	$19,300
(e) Insulation (0.10 B)	$11,600
(f) Painting (0.01 B)	$11,600
(g) Building and Site Preparation (as required)	not included
Total Direct Installation Cost (0.57 B + (g))	**$316,100**
Total Direct Costs (TDC) (1) + (2)	**$701,370**
INDIRECT COSTS:	
(1) Indirect Field Costs (0.15 B)	$104,000
(2) Engineering Costs (0.05 B)	$158,000
(3) Start-up (0.02 B)	$19,300
(4) Performance test (0.01 B)	$11,600
Total Indirect Costs (TIC) (0.33 B)	**$292,900**
Contingency (30 % of Total Direct and Indirect Costs)	**$298,300**
6-Year Escalation (15 % of Total Direct and Indirect Costs)	**$149,100**
TOTAL INSTALLED CAPITAL COSTS (TCC)	**$1,441,670**

Yukon Pacific BACT Analysis

c:\ypcbact.wk1

Table 2
Yukon Pacific Corporation
Steam Boiler NOx BACT Analysis (14 % Load)
Selective Catalytic Reduction (SCR)

Annualized Costs	
DIRECT COSTS:	
(1) Operating Labor (1,095 hrs/yr @ $25/hr)	$27,400
(2) Supervisory Labor (0.15 C)	$4,100
(3) Maintenance Labor (1,095 hrs/yr @ $25/hr)	$27,400
(4) Replacement Parts and Materials (0.10 * (1a+1b+1c))	$35,700
(5) Utilities	
(a) Electricity	not estimated
(b) Steam	not estimated
(6) Chemicals (0.6 tons per ton NOx removed @ $250/ton)	$1,200
(7) Catalyst Replacement (3-year life, catalyst 65 % of capital cost)	$53,315
Total Direct Costs:	**$149,115**
INDIRECT COSTS:	
(1) Overhead 0.80(1.15 C + 0.04 TDC)	$47,700
(2) Property Tax (0.01 TCC)	$14,400
(3) Insurance (0.01 TCC)	$14,400
(4) G&A Charges (0.02 TCC)	$28,800
(5) Capital Recovery (0.163 TCC)	$235,000
Total Indirect Costs:	**$340,300**
TOTAL ANNUALIZED COSTS:	**$489,400**
Tons Per Year of NOx Removed	**8**
COST EFFECTIVENSS (Dollars per ton of NOx Removed)	**$61,200**

Table 3
Yukon Pacific Corporation
Steam Boiler NOx BACT Analysis (Full Load)
Selective Catalytic Reduction (SCR)

Capital Costs	
DIRECT COSTS:	
(1) Purchased Equipment Costs:	
(a) Basic Equipment (A)	$246,070
(a) Out-of-Scope Auxiliaries (including boiler modifications) (0.35 A)	$86,100
(b) Instruments and Controls (0.10 A)	$24,600
(c) Freight and Taxes (0.08 A)	$28,500
Total Equipment Cost (B):	$385,270
(2) Direct Installation Costs:	
(a) Foundations and Supports (0.08 B)	$84,800
(b) Erection and Handling (0.14 B)	$146,400
(c) Electrical (0.04 B)	$42,400
(d) Piping (0.20 B)	$19,300
(e) Insulation (0.10 B)	$11,600
(f) Painting (0.01 B)	$11,600
(g) Building and Site Preparation (as required)	not included
Total Direct Installation Cost (0.57 B + (g))	**$316,100**
Total Direct Costs (TDC) (1) + (2)	**$701,370**
INDIRECT COSTS:	
(1) Indirect Field Costs (0.15 B)	$104,000
(2) Engineering Costs (0.05 B)	$158,000
(3) Start-up (0.02 B)	$19,300
(4) Performance test (0.01 B)	$11,600
Total Indirect Costs (TIC) (0.33 B)	**$292,900**
Contingency (30 % of Total Direct and Indirect Costs)	**$298,300**
6-Year Escalation (15 % of Total Direct and Indirect Costs)	**$149,100**
TOTAL INSTALLED CAPITAL COSTS (TCC)	**$1,441,670**

Table 4
Yukon Pacific Corporation
Steam Boiler NOx BACT Analysis (Full Load)
Selective Catalytic Reduction (SCR)

Annualized Costs	
DIRECT COSTS:	
(1) Operating Labor (1,095 hrs/yr @ $25/hr)	$27,400
(2) Supervisory Labor (0.15 C)	$4,100
(3) Maintenance Labor (1,095 hrs/yr @ $25/hr)	$27,400
(4) Replacement Parts and Materials (0.10 * (1a+1b+1c))	$35,700
(5) Utilities	
(a) Electricity	not estimated
(b) Steam	not estimated
(6) Chemicals (0.6 tons per ton NOx removed @ $250/ton)	$47,600
(7) Catalyst Replacement (3-year life, catalyst 65 % of capital cost)	$53,315
Total Direct Costs:	**$195,515**
INDIRECT COSTS:	
(1) Overhead 0.80(1.15 C + 0.04 TDC)	$47,700
(2) Property Tax (0.01 TCC)	$14,400
(3) Insurance (0.01 TCC)	$14,400
(4) G&A Charges (0.02 TCC)	$28,800
(5) Capital Recovery (0.163 TCC)	$235,000
Total Indirect Costs:	**$340,300**
TOTAL ANNUALIZED COSTS:	**$535,800**
Tons Per Year of NOx Removed	**317**
COST EFFECTIVENSS (Dollars per ton of NOx Removed)	**$1,700**

Table 5
Yukon Pacific Corporation
Steam Boiler NOx BACT Analysis (65 % Load)
Selective Catalytic Reduction (SCR)

Capital Costs	
DIRECT COSTS:	
(1) Purchased Equipment Costs:	
(a) Basic Equipment (A)	$246,070
(a) Out-of-Scope Auxiliaries (including boiler modifications) (0.35 A)	$86,100
(b) Instruments and Controls (0.10 A)	$24,600
(c) Freight and Taxes (0.08 A)	$28,500
Total Equipment Cost (B):	$385,270
(2) Direct Installation Costs:	
(a) Foundations and Supports (0.08 B)	$84,800
(b) Erection and Handling (0.14 B)	$146,400
(c) Electrical (0.04 B)	$42,400
(d) Piping (0.20 B)	$19,300
(e) Insulation (0.10 B)	$11,600
(f) Painting (0.01 B)	$11,600
(g) Building and Site Preparation (as required)	not included
Total Direct Installation Cost (0.57 B + (g))	**$316,100**
Total Direct Costs (TDC) (1) + (2)	**$701,370**
INDIRECT COSTS:	
(1) Indirect Field Costs (0.15 B)	$104,000
(2) Engineering Costs (0.05 B)	$158,000
(3) Start-up (0.02 B)	$19,300
(4) Performance test (0.01 B)	$11,600
Total Indirect Costs (TIC) (0.33 B)	**$292,900**
Contingency (30 % of Total Direct and Indirect Costs)	**$298,300**
6-Year Escalation (15 % of Total Direct and Indirect Costs)	**$149,100**
TOTAL INSTALLED CAPITAL COSTS (TCC)	**$1,441,670**

Table 6
Yukon Pacific Corporation
Steam Boiler NOx BACT Analysis (65 % Load)
Selective Catalytic Reduction (SCR)

Annualized Costs	
DIRECT COSTS:	
(1) Operating Labor (1,095 hrs/yr @ $25/hr)	$27,400
(2) Supervisory Labor (0.15 C)	$4,100
(3) Maintenance Labor (1,095 hrs/yr @ $25/hr)	$27,400
(4) Replacement Parts and Materials (0.10 * (1a+1b+1c))	$35,700
(5) Utilities	
(a) Electricity	not estimated
(b) Steam	not estimated
(6) Chemicals (0.6 tons per ton NOx removed @ $250/ton)	$16,100
(7) Catalyst Replacement (3-year life, catalyst 65 % of capital cost)	$53,315
Total Direct Costs:	$164,015
INDIRECT COSTS:	
(1) Overhead 0.80(1.15 C + 0.04 TDC)	$47,700
(2) Property Tax (0.01 TCC)	$14,400
(3) Insurance (0.01 TCC)	$14,400
(4) G&A Charges (0.02 TCC)	$28,800
(5) Capital Recovery (0.163 TCC)	$235,000
Total Indirect Costs:	$340,300
TOTAL ANNUALIZED COSTS:	$504,300
Tons Per Year of NOx Removed	107
COST EFFECTIVENSS (Dollars per ton of NOx Removed)	$4,700

APPENDIX D
CONSISTENCY REVIEW
LETTER FROM DGC TO YPC

STATE OF ALASKA

OFFICE OF THE GOVERNOR

OFFICE OF MANAGEMENT AND BUDGET
DIVISION OF GOVERNMENTAL COORDINATION

STEVE COWPER, GOVERNOR

CENTRAL OFFICE
P.O. BOX AW
JUNEAU, ALASKA 99811-0165
PHONE: (907) 465-3562

SOUTHEAST REGIONAL OFFICE
431 NORTH FRANKLIN
P.O. BOX AW, SUITE 101
JUNEAU, ALASKA 99811-0165
PHONE: (907) 465-3562

SOUTHCENTRAL REGIONAL OFFICE
2600 DENALI STREET
SUITE 700
ANCHORAGE, ALASKA 99503-2798
PHONE: (907) 274-1581

NORTHERN REGIONAL OFFICE
675 SEVENTH AVENUE
STATION H
FAIRBANKS, ALASKA 99701-4596
PHONE: (907) 456-3084

January 20, 1988

Mr. Harry Noah
TAGS Project Manager
Yukon Pacific Corporation
P.O. Box 101700
Anchorage, AK 99510

CERTIFIED MAIL
RETURN RECEIPT
REQUESTED

Dear Mr. Noah:

SUBJECT: TRANS-ALASKA GAS SYSTEM (TAGS) STATE RIGHT-OF-WAY APPLICATION (ADL 413342) CONSISTENCY DETERMINATION (STATE I.D. NO. AK87121604/F)

The Division of Governmental Coordination (DGC) has completed the state's review of Yukon Pacific Corporation's (YPC) application for a Conditional State Right-of-Way Lease for the Trans-Alaska Gas System.

Project Scope of Review

The TAGS project will be developed in several discrete phases, each requiring a coastal consistency review as provided under 6 AAC 50.190(14). The "project" under review in this phase is that described by YPC in its application for a conditional State Right-of-Way Lease (ADL 413342) and can generally be described as a 36-inch diameter, buried, chilled-gas pipeline, approximately parallel to the existing Trans-Alaska Pipeline System, extending from Prudhoe Bay to a terminal at Anderson Bay in Port Valdez.

Tiered Consistency Reviews

Coastal consistency reviews, as provided in 6 AAC 50.190(14), shall occur for each of the following phases of the TAGS project:

1. Current Phase: The project as generally described in YPC's application for a conditional right-of-way

lease for purposes of facilitating the financing and design of TAGS.

2. Design and Engineering Phase: The project as it has generally developed just prior to a "fit, willing and able" finding, criteria for which will be placed in the conditional right-of-way lease, and resulting upgrade of the conditional lease to a full AS 38.35 right-of-way lease shall be subject to coastal consistency review.

   In this phase, it is expected that YPC will provide well-defined project features such as design criteria, a surveyed pipeline route, surveyed facility locations, preliminary plans and procedures, geotechnical data, and updated biological information. ACMP review at this phase is necessary in order to correct inconsistent project features before final design is initiated. Any amendments to the right-of-way lease including the addition of a gas conditioning facility will require separate coastal consistency review.

3. Construction Authorizations: Notice to Proceed (NTP) applications for activities located in the coastal zone pursuant to the Right-of-Way Lease ADL 413342 and associated permit packages. In this phase final designs, routes, locations, plans, and procedures will be available (just before and during construction) and will be subject to coastal consistency reviews.

4. Miscellaneous General and Site-Specific Authorizations: Activities not authorized by the State right-of-way lease, site-specific permits not incorporated in the NTP packages, and lease amendments that are located in the coastal zone will be subject to separate coastal consistency reviews.

   These general and site-specific authorizations may occur throughout the development of TAGS and may include but are not limited to land use permits, permits for pre-construction activities, individual material sale authorizations, air and water quality permits, Corps of Engineers 404 permits, and fish habitat permits.

Based on the review of the current phase of the TAGS project (as described in the project scope) by the Departments of Natural Resources, Environmental Conservation, Fish and Game, and the

North Slope Borough and City of Valdez, the state concludes that the TAGS project is consistent with the standards of the ACMP and the North Slope Borough and City of Valdez Coastal Management Programs.

If changes to the project as authorized by this finding are made during its implementation, you are required to contact this office to determine if a review of the proposed revision is necessary.

Thank you for your cooperation with the ACMP.

Sincerely,

Elizabeth A. Benson
Project Review Coordinator
TAGS Liaison Officer

cc: Commissioner Judy Brady, DNR, Juneau
Commissioner Don Collinsworth, DFG, Juneau
Commissioner Dennis Kelso, DEC, Juneau
Rod Swope, Office of the Governor, Juneau
Jerry Brossia, Pipeline Officer, DNR, Fairbanks
Al Ott, Liaison Officer, DFG, Fairbanks
Paul Bateman, Liaison Officer, DEC, Fairbanks
Rick Smith, Liaison Officer, DNR, Fairbanks
Mike Tinker, Liaison Officer, DOT/PF, Fairbanks
Jules Tileston, BLM, Anchorage
Bill Fowler, Corps of Engineers, Anchorage

Coastal Project Questionnaire and Certification Statement

answer all questions. To avoid a delay in processing, please call the department if you answer "yes" to any of e questions related to that department. Maps and plan drawings must be included with your packet.

An incomplete packet will be returned.

APPLICANT INFORMATION

1. Yukon Pacific Company L.P.
Name of Applicant
1049 W. 5th Avenue
Address
Anchorage, AK 99501
City State Zip Code
(907) 265-3100
Daytime Phone
(907) 265-3180
Fax Number

2. _____
Agent (or responsible party if other than applicant)
Address
City State Zip Code
Daytime Phone
Fax Number

PROJECT INFORMATION

	Yes	No
1. This activity is a: [x] new project [ ] modification or addition to an existing project If a modification do you currently have any State, federal or local approvals related to this activity?	[ ]	[ ]

Note: Approval means any form of authorization. If "yes," please list below:

Approval Type	Approval #	Issuance Date	Expiration Date

	Yes	No
2. Has this project ever been reviewed by the State of Alaska per the ACMP?	[x]	[ ]

Previous State I.D. Number: AK 87121604/F Previous Project Name: TAGS State ROW

PROJECT DESCRIPTION

Attach the following: • a detailed description of the project and all associated facilities; • a project timeline for completion of all major activities in the proposal; • a site plan depicting all proposed actions; • other supporting documentation that would facilitate review of the project. Note: If the project is a modification, identify existing facilites as well as proposed activities on the site plan.

Proposed starting date for project: undetermined Proposed ending date for project: undetermined

See note 1

Provide a brief description of your entire project and ALL associated facilities (access roads, caretaker facilities, waste disposal sites, etc.).

See note 2

PROJECT LOCATION

Attach a copy of the topographical map with the project location marked on it.

Location of project (include nearest community or name of the land feature or body of water. Identify township, range and section): South shore of Port Valdez, Alaska

Township 9S Range 7&8 W Section various Meridian Copper River Latitude/Longitude ____/____

3. The project is on: [X] State Land* [ ] Federal Land [ ] Private Land [ ] Municipal Land

State land can be uplands, tidelands, or submerged lands to 3 miles offshore. See Question #1 in DNR section.

4. The project is located in which region (see attached map): [ ] Northern [ ] Southcentral [ ] Southeast [X] State Pipeline Coordinator's Office

5. Is the project located in a coastal district? ..... Yes [X] No [ ]

If yes, please contact the district representative listed on the attached sheet.

6. Identify the communities closest to your project location: Valdez, Alaska

FEDERAL APPROVALS

1. Is the proposed project on U.S. Forest Service (USFS) land or will you need to cross USFS lands for access? ..... temporarily (see note 3) ..... Yes [X] No [ ]

Does the cost of the project exceed $250,000? ..... [ ] [X]

If yes, have you applied for a USFS permit or approval? ..... [ ] [X]

Date of submittal: _____

2. Is the proposed project on Bureau of Land Management (BLM) land or will you need to cross BLM lands for access? ..... [ ] [X]

Does the cost of the project exceed $250,000? ..... [ ] [ ]

If yes, have you applied for a BLM permit or approval? ..... [ ] [ ]

Date of submittal: _____

3. Will you be constructing a bridge over tidal (ocean) waters, or navigable rivers, streams or lakes? ..... [ ] [X]

If yes, have you applied for a U.S. Coast Guard permit for a bridge? ..... [ ] [ ]

Date of submittal: _____

4. Will you be dredging or placing structures or fills in any of the following: tidal (ocean) waters? streams? lakes? wetlands*? ..... [X] [ ]

If yes, have you applied for a U.S. Army Corps of Engineers (COE) permit? ..... [ ] [X]

Date of submittal: _____

(Note: Your application for this activity to the Corps of Engineers also serves as your application to DEC.)

**If you are not certain whether your proposed project is in a wetlands, contact the U.S. Corps of Engineers, Regulatory Branch at (907) 753-2720 for a wetlands determination (outside the Anchorage area call toll free 1-800-478-2712.)*

5. Have you applied for a U.S. Environmental Protection Agency National Pollution Discharge Elimination System (NPDES) permit? . . . . . Yes ☐ No ☒
Date of submittal: _____
(Note: For information regarding the need for an NPDES permit, contact EPA at (907) 271-5083.)

6. Will you have a putrescible waste discharge within 5 miles of any public airport? . . . . . ☐ ☒
If yes, please contact the Airports Division of the Federal Aviation Administration at (907) 271-5440.

7. Does the project include a nonfederal power project affecting any navigable body of water or located on federal land? Or, is utilization of surplus water from any federal government dam proposed? . . . . . ☐ ☒
(Power projects consist of dams, water conduits, reservoirs, powerhouses, and transmission lines.)
If yes, have you applied for a permit from the Federal Energy Regulatory Commision (FERC)? . . . . . ☐ ☐
Date of submittal: _____
(Note: For information, contact FERC, Office of Hydropower Licensing, at (202) 208-0200.)

7. Have you applied for permits from any other federal agency? . . . . . ☐ ☐

AGENCY	APPROVAL TYPE	DATE SUBMITTED
Federal Energy Regulatory Commission	Place of Export Certification	1988 through 1995

US Forest Service: contacted Cal Baker-(approval not required at this time)

DEPARTMENT OF ENVIRONMENTAL CONSERVATION (DEC) APPROVALS

	Yes	No
Will a discharge of wastewater from industrial or commercial operations occur?	☒	☐
Will the discharge be connected to an already approved sewer system?	☐	☒
Will the project include a stormwater collection/discharge system?	☒	☐

2. Do you intend to construct, install, modify, or use any part of a wastewater (sewage or greywater) disposal system? . . . . . ☒ ☐
a) If so, will the discharge be 500 gpd or greater? . . . . . ☒ ☐
b) If constructing a domestic wastewater treatment or disposal system, will the system be located within fill material requiring a COE permit? see note 4 . . . . ☒ ☐

If you answered yes to a or b, answer the following:
1) How deep is the bottom of the system to the top of the subsurface water table? see note 4
2) How far is any part of the wastewater disposal system from the nearest surface water? see note 4
3) Is the surrounding area inundated with water at any time of the year? . . . . ☐ ☒
4) How big is the fill area to be used for the absorption system? see note 4
(Questions 1 & 2 will be used by DEC to determine whether separation distances are being met; Questions 3 & 4 relate to the required size of the fill if wetlands are involved.)

3. Do you expect to request a mixing zone for your proposed project? see note 4 . . . . [X] ☐

(If your wastewater discharge will exceed Alaska water quality standards, you may apply for a mixing zone. If so, please contact DEC to discuss information required under 18 AAC 70.032.)

	Yes	No
Do you plan to store or dispose of any type of solid waste resulting from this project?	[X]	☐

(Note: Solid waste means drilling wastes, garbage, refuse, sludge, and other discarded material, including solid, liquid, semi-solid, or contained gaseous material resulting from industrial, commercial, and agricultural operations, and from community activities.)

5. Will your project require the application of oil, pesticides, and/or any other broadcast chemicals to the surface of the land and/or the waters of the state? . . . . . [X] ☐

6. a. Will you have a facility that will generate air emissions from processing greater than *five tons per hour* of material? . . . . . ☐ [X]

b. Will you have one or more units of fuel burning equipment, including flaring, with a heat input rating of *50 million Btu per hour* or more? . . . . . [X] ☐

c. Will you have a facility containing incinerators with a total charging capacity of *1,000 pounds per hour* or more? . . . . . ☐ [X]

d. Will you incinerate sludge? . . . . . [X] ☐

e. Will you have any of the following processes: . . . . . [X] ☐

- ☐ Asphalt plant
- ☐ Petroleum refinery
- ☐ Petroleum Contaminated Soils Cleanup
- ☐ Coal preparation facility
- [X] ~~Portland~~ cement plant (batch)

f. Will your facility use the following equipment? . . . . . [X] ☐

- [X] diesel internal combustion engines? (Total capacity equal to or greater than *1,750 kilowatts* or total rated brake specific horsepower greater than *2,350 bhp*)
- [X] gas fired boilers (Total heat input rating of *100 million Btu* per hour)
- [X] oil fired boilers (Total heat input rating of *65 million Btu* per hour) diesel
- [X] combustion turbines (total rated power output of *8,000 Hp*)

g. Will your facility burn more than the following per year in stationary equipment? . . . . . [X] ☐

- [X] 1,000,000 gallons of fuel oil
- ☐ 35,000 tons of coal
- [X] 900 million cubic feet of natural gas

h. If you have answered "yes" to any of the above questions (6 a-g), have you installed, replaced or modified any fuel burning or processing equipment since 1977? . . . . . ☐ [X]

7. Will you be developing, constructing, installing, or altering a public water system? . . . . . ☐ [X]

8. a. Will your project involve the operation of waterborne tank vessels or oil barges that carry crude or non-crude oil as bulk cargo, or the transfer of oil or other petroleum products to or from such a vessel or a pipeline system? . . . . . [X] ☐

b. Will your project require or include onshore or offshore oil facilities with an effective aggregate storage capacity of greater than 5,000 barrels of crude oil

or greater than 10,000 barrels of non-crude oil? ☒ ☐

c. Will you be operating facilities on the land or water for the exploration or production of hydrocarbons? ☐ ☒

If you answered NO to ALL questions in this section, continue to next section.

If you answered YES to ANY of these questions, contact the DEC Regional office for information and application forms. Please be advised that all new DEC permits and approvals require a 30-day public notice period.

Based on your discussion with DEC, please complete the following:
Approval Type: ADEC contact: JPO and Alfred Bohn Date Submitted: _____

	Yes	No
9. Does your project qualify for a general permit for wastewater or solid waste?	☐	☒

10. If you answered yes to any questions and are not applying for DEC permits, indicate reason below:
☐ _____ (DEC contact) told me on _____ that no DEC approvals are required on this project. Reason: _____
☒ Other: DEC permits to be secured subject to tiered permit process

DEPARTMENT OF FISH & GAME (DFG) APPROVALS

	Yes	No
1. Will you be working in, or placing anything in, a stream, river or lake? (This includes work in running water or on ice, within the active flood plain, on islands, the face of the banks or the tidelands down to mean low tide.)*(Note: If the proposed project is located within a Federal Emergency Management Agency Zone, a Floodplain Development Permit may be required. Contact the local municipal government for additional information and a floodplain determination.)*	☒	☐
Name of ☒ stream, ☐ river, or ☐ lake: Seven Mile Creek, Nancy Creek		
Will you do any of the following?	☐	☐

Please indicate below:

- ☒ Build a dam, river training structure or instream impoundment?
- ☒ Use the water?
- ☒ Pump water out of the stream or lake?
- ☒ Divert or alter the natural stream channel?
- ☒ Block or dam the stream (temporarily or permanently)?
- ☒ Change the water flow or the water channel?
- ☒ Introduce silt, gravel, rock, petroleum products, debris, chemicals, or other organic/inorganic waste of any type into the water?
- ☒ Alter or stabilize the banks?
- ☒ Mine or dig in the beds or banks?
- ☒ Use explosives?
- ☒ Build a bridge (including an ice bridge)?
- ☒ Use the stream as a road (even when frozen), or crossing the stream with tracked or wheeled vehicles, log-dragging or excavation equipment (backhoes, bulldozers, etc.)?
- ☒ Install a culvert or other drainage structure?
- ☐ Construct a weir?
- ☐ Use an in-stream structure not mentioned here?

3. Is your project located in a designated State Game Refuge, Critical Habitat Area or State Sanctuary? . . . . . ☐ ☒

Does your project include the construction/operation of a salmon hatchery? . . . . . ☐ ☒
Yes No

5. Does your project affect, or is it related to, a previously permitted salmon hatchery? . . . . . ☐ ☒

Does your project include the construction of an aquatic farm? . . . . . ☐ ☒

If you answered "No" to ALL questions in this section, continue to next section.

If you answered "Yes" to ANY questions under 1-3, contact the Regional DFG Habitat Division Office for information and application forms.

If you answered "Yes" to questions 4-6, contact the DFG at the CFMD division headquarters for information and application forms.

Based on your discussion with DFG, please complete the following:
Approval Type: Contact: JPO Date Submitted: _____
J. Brossia & D. Dorris

If you answered yes to any questions and are not applying for DFG permits, indicate reason below:
☐ _____ (DFG contact) told me on _____ that no DFG approvals are required. Reason: _____
☒ Other: Permits to be obtained subject to tiered permit process

PARTMENT OF NATURAL RESOURCES (DNR) APPROVALS

1. Is the proposed project on State-owned land or will you need to cross State-owned land for access? ("access" includes temporary access for construction purposes) . . . . . Yes ☒ No ☐

Note: In addition to State-owned uplands, the State owns almost all land below the ordinary high water line of navigable streams, rivers and lakes, and below the mean high tide line seaward for three miles.

2. Do you plan to dredge or otherwise excavate/remove materials on State-owned land? . . . . ☒ ☐
Location of dredging site if other than the project site:
Township 9S Range 7&8 W Section various Meridian Copper River

3. Do you plan to place fill or dredged material on State-owned land? . . . . . ☒ ☐
Location of fill disposal site if other than the project site: _____
Township 9S Range 7&8 W Section various Meridian Copper River
Source is on: ☒ State Land ☐ Federal Land ☐ Private Land ☐ Municipal Land

4. Do you plan to use any of the following State-owned resources: . . . . . ☒ ☐

☒ *Timber*: Will you be harvesting timber? Amount: approximately 300 acres

☒ *Materials such as rock, sand or gravel, peat, soil, overburden, etc.:*
Which material? all of the above Amount: about 7.5 million cubic yards
Location of source: ☒ Project site ☐ Other, describe: _____
Township 9S Range 7&8 W Section various Meridian Copper River

Are you planning to use or divert any fresh water? ☒ ☐
Amount (gallons per day): 320,000
Source: Seven Mile Creek impoundment Intended Use: Construcion camps & concrete batch plants (facility operation rate is much less)

	Yes	No
6. Will you be building or altering a dam?	☒	☐
7. Do you plan to drill a geothermal well?	☐	☒
At any one site (regardless of land ownership), do you plan to do any of the following?	☐	☒
☐ Mine five or more acres over a year's time?		
☐ Mine 50,000 cubic yards or more of materials (rock, sand or gravel, soil, peat, overburden, etc.) over a year's time?		
☐ Have a cumulative unreclaimed mined area of five or more acres?		
If you plan to mine less than the acreage/amount stated above and have a cumulative unreclaimed mined area of less than five acres, do you intend to file a voluntary reclamation plan for approval?	☐	☐
9 Will you be exploring for or extracting coal?	☐	☒
10. Will you be drilling for oil/gas?	☐	☒
11. Will you be investigating or removing historical or archaeological resources on State-owned land?	☐	☒
12. Is the proposed project located within a known geophysical hazard area?	☐	☒
13. Is the proposed project located in a unit of the Alaska State Park System?	☐	☒

If you answered "No" to ALL questions in this section, continue to certification statement.

If you answered "Yes" to ANY questions in this section, contact DNR for information.

Based on your discussion with DNR, please complete the following:
Approval Type: contact: JPO Date Submitted: _____

14. If you answered yes to any questions and are not applying for DNR permits, indicate reason below:
☐ _____ (DNR contact) told me on _____ that no DNR approvals are required. Reason: _____
☒ Other: Permits to be obtained per tiered permit process

Certification Statement

The information contained herein is true and complete to the best of my knowledge. I certify that the proposed activity complies with, and will be conducted in a manner consistent with, the Alaska Coastal Management Program.

[illegible] for MCT Smith — August 12, 1996

Signature of Applicant or Agent — Date

Michael C.T. Smith
Manager of Permitting

Note: Federal agencies conducting an activity that will affect the coastal zone are required to submit a federal consistency determination, per 15 CFR 930, Subpart C, rather than this certification statement.

This certification statement will not be complete until all required State and federal authorization requests have been submitted to the appropriate agencies.

- To complete your packet, please attach your State permit applications and copies of your federal permit applications to this questionnaire.

Attachment (1 page)

Note 1

The proposed starting and ending dates for the project cannot be stated until natural gas supplies and purchase agreements with the LNG markets are secured. A description of the project and associated facilities, timeline, and site plan are included in the PSD application submitted concurrent to this questionnaire. Other supporting documentation which would facilitate review of the project has been submitted in association with the federal Right-Of-Way Grant for the Trans-Alaska Gas System (a project-wide environmental impact statements was required), Conditional Right-Of-Way Lease from the State of Alaska (ADL 413342), and Place of Export certification from FERC (an environmental impact statements specific for the Anderson Bay LNG/Marine Terminal was required).

Note 2

The portion of the Trans-Alaska Gas System for which the PSD application is being submitted consists of liquefaction trains to condense the natural gas feed to LNG, crogenic tanks to temporarily store the LNG on site, a marine terminal to load the LNG onto tankers, a fractionation facility to extract refrigerants from the feed gas, a plant to supply water, a wastewater treatment plant, a waste incinerator, electric power generation facilities and a cargo dock.

Note 3

The facilities at Anderson Bay will be sited on approximately 300 acres of state land. The plant boundary, which encloses an area larger than that required just for facilities, will include some US Forest Service land on a temporary basis during construction. The plant boundary is defined for air quality purposes as the controlled boundary within which members of the public are not allowed. Ambient air quality standards (both Prevention of Significant Deterioration, "PSD", and National Ambient Air Quality Standards, "NAAQS") apply to the areas outside of the plant boundary. During construction the plant boundary will include USFS land in order to control public access in accordance with PSD requirements. Once construction is completed, a smaller controlled plant boundary will be used which will enclose only state land and no USFS land. It should be noted air quality modeling results show that NAAQS limits will not be exceeded anywhere on the USFS land to be controlled, thus health and safety are not an issue. Temporary control of the USFS land is necessary only to meet the more stringent PSD requirements.

Note 4

The wastewater disposal system will employ filtration, aeration, and clarifiers to produce a discharge water of sufficient quality to flow directly to an outfall structure. Solids produced in system will be incinerated on site. COE review and permits will be required for construction of facilities at the Anderson Bay site including the wastewater treatment plant. Questions 1) through 4) appear to address septic systems and as such are not applicable to the proposed wastewater system. The mixing zone referenced in Question 3. is that required for a combined discharge from a desalination plant (backup use only) and steam boiler blowdown.

APPENDIX E
PROCESS FLOW DIAGRAMS

FIGURE 2-3

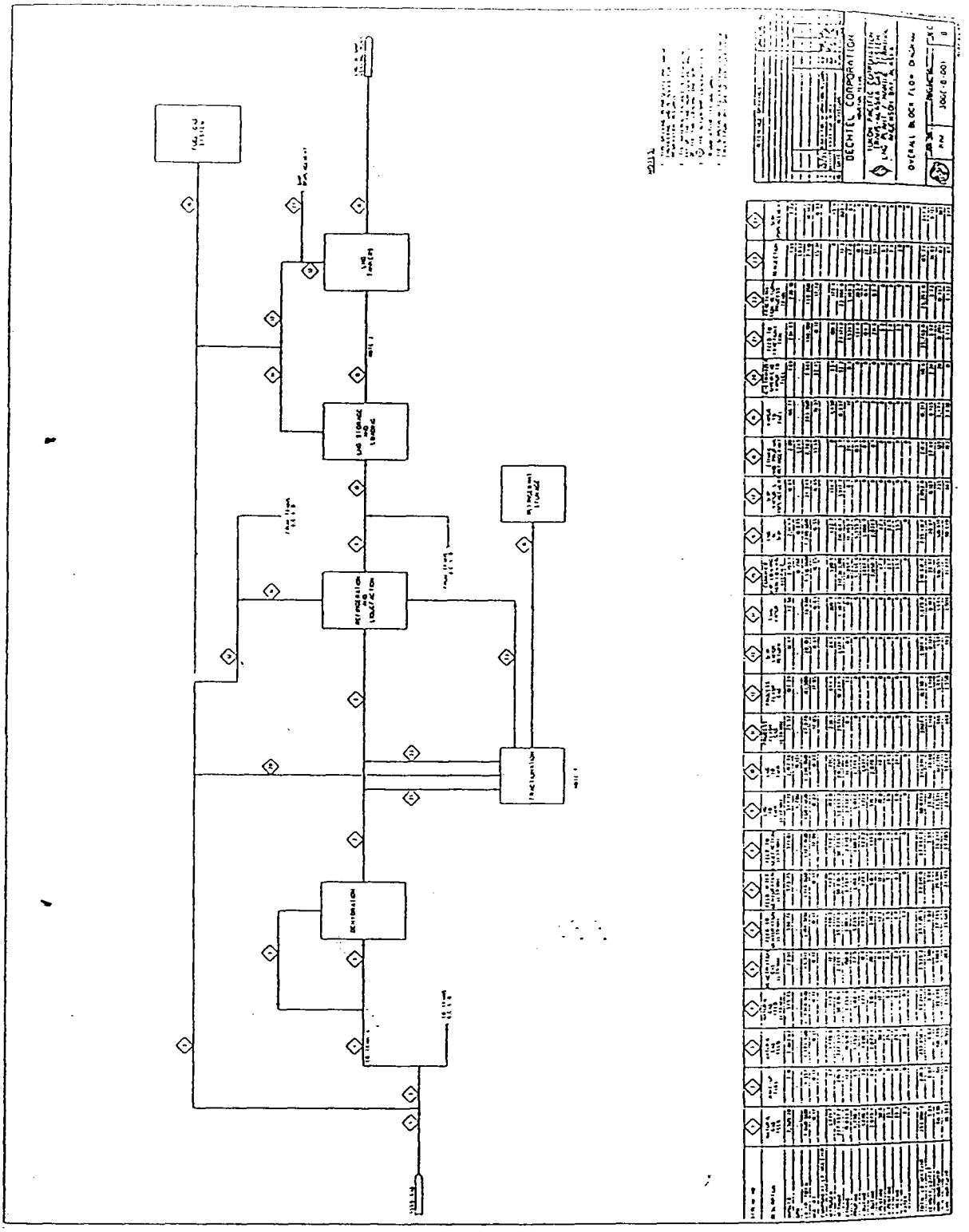

FIGURE 2-4

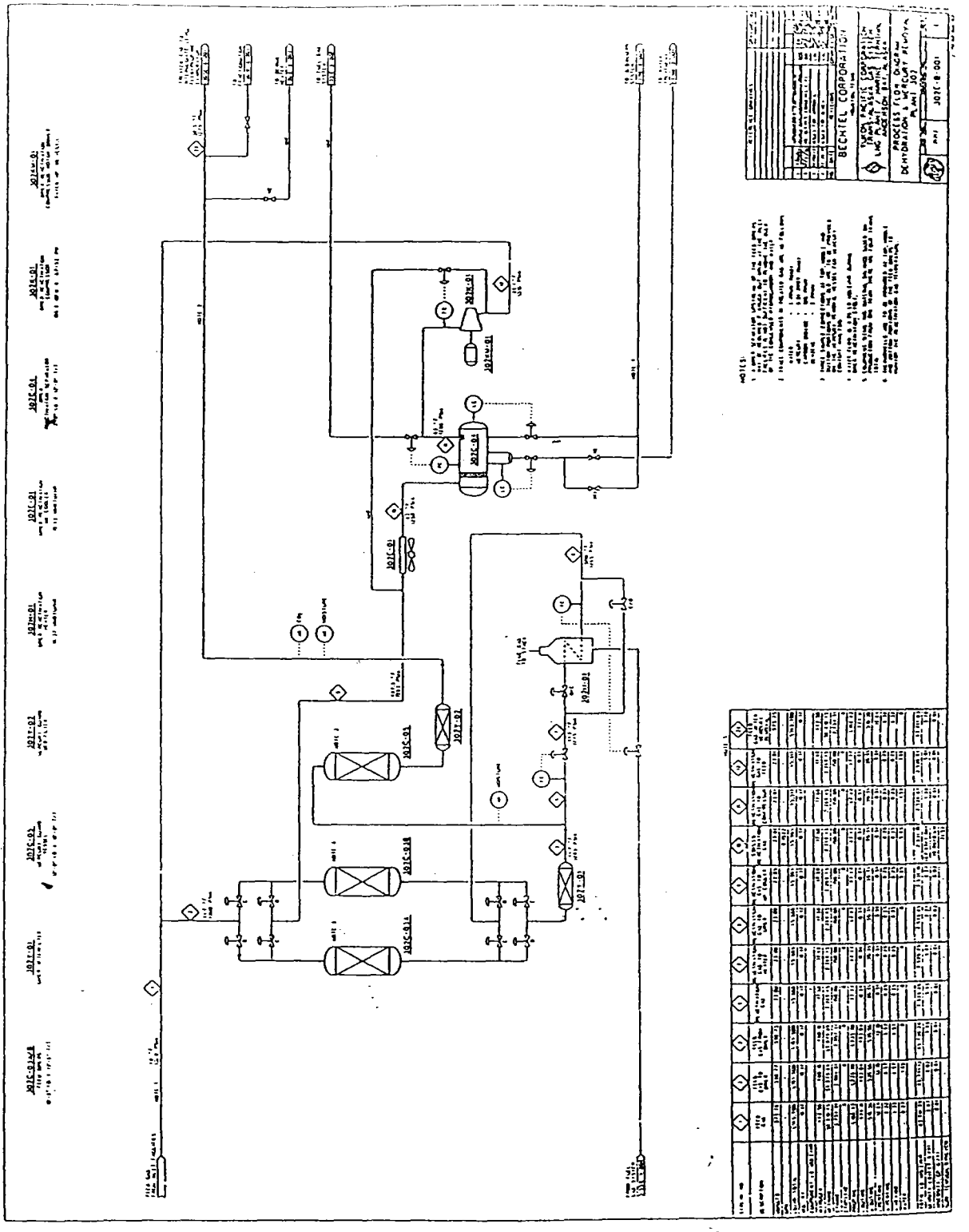
BECHTEL CORPORATION
PROCESS FLOW DIAGRAM
DEHYDRATION & MERCURY REMOVAL
NOTES:

FIGURE 2-5

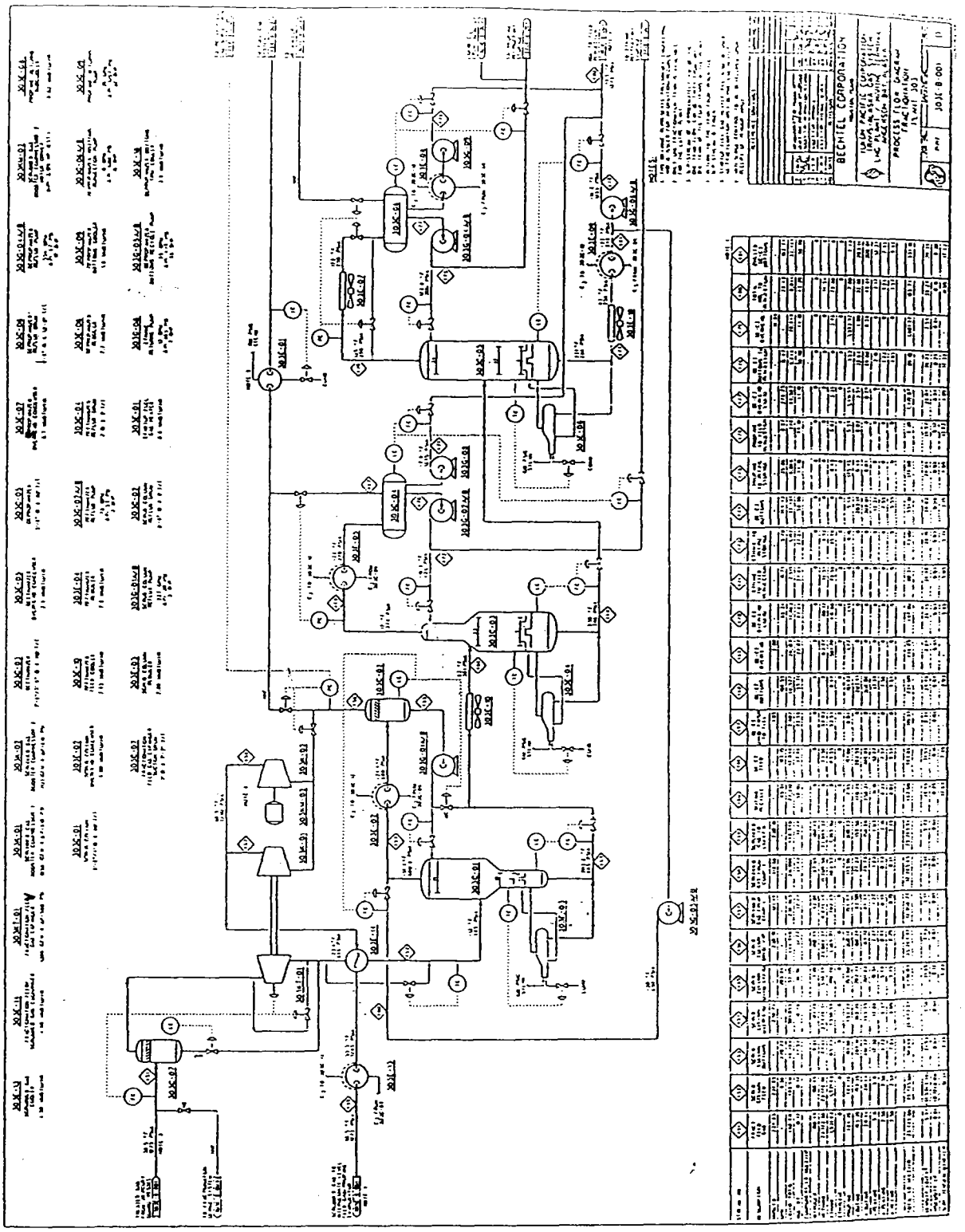

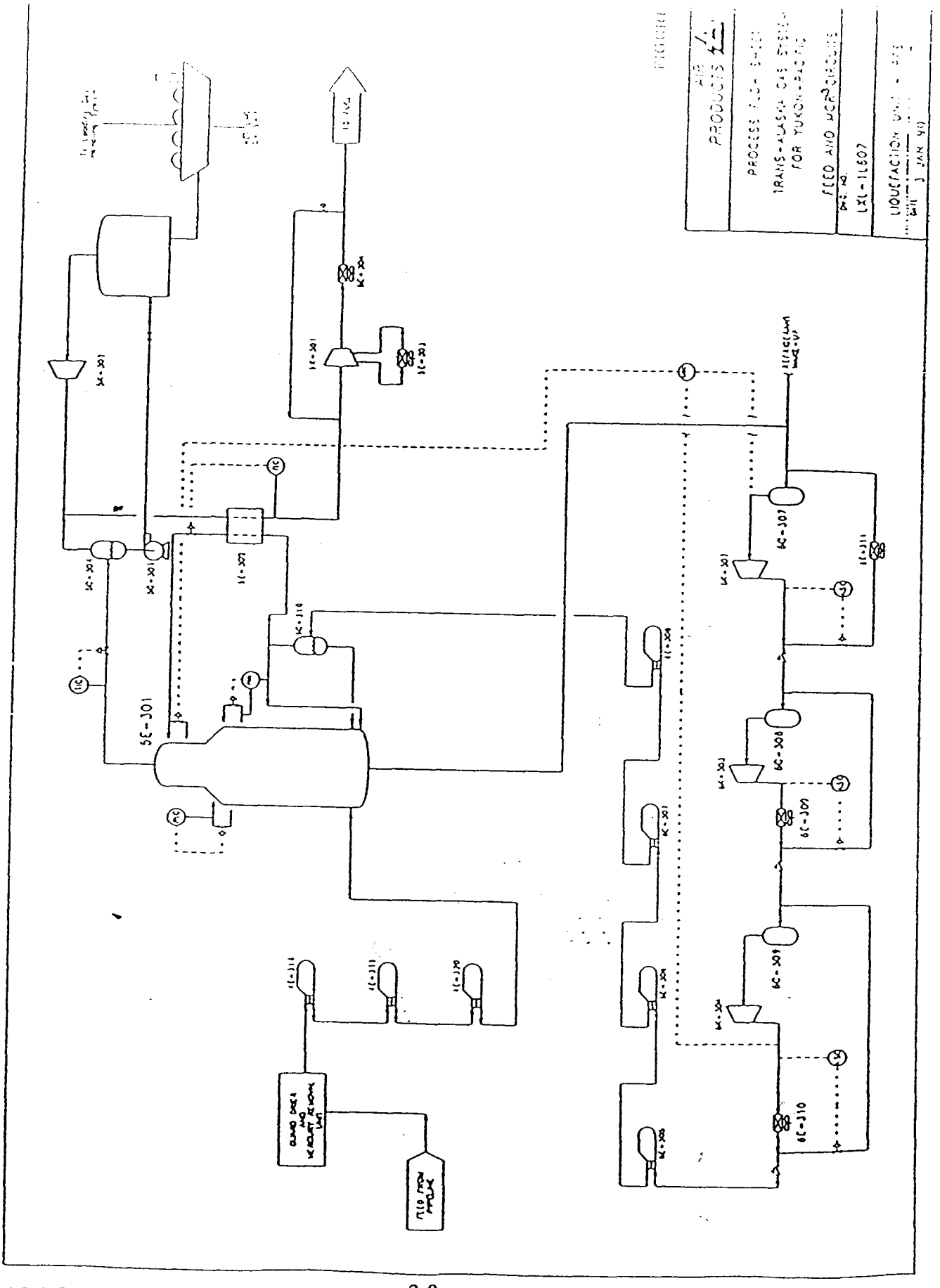
PRODUCTS
FEED AND MCR CIRCUITS
LXL-1L607
5E-301
6C-307
6C-308
6C-309
6C-310

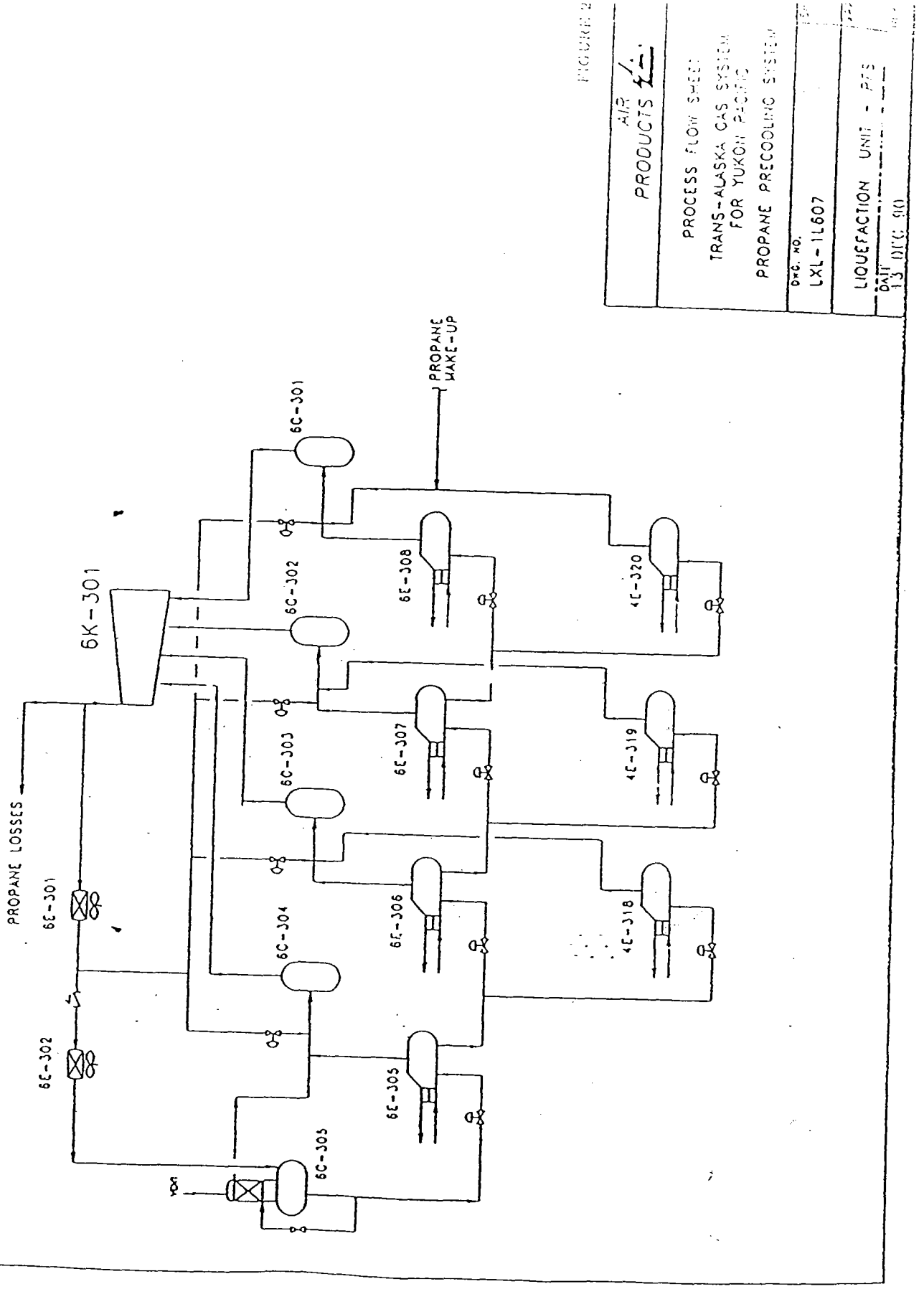
FIGURE 2
AIR PRODUCTS
PROCESS FLOW SHEET
TRANS-ALASKA GAS SYSTEM
FOR YUKON PACIFIC
PROPANE PRECOOLING SYSTEM
DWG. NO.
LXL-1L607
LIQUEFACTION UNIT - PFS
DATE
13 DEC 90
PROPANE MAKE-UP
6C-301
6C-302
6C-303
6C-304
6C-305
6K-301
6E-308
6E-307
6E-306
6E-305
4E-320
4E-319
4E-318
PROPANE LOSSES
6E-301
6E-302

FIGURE 2-8

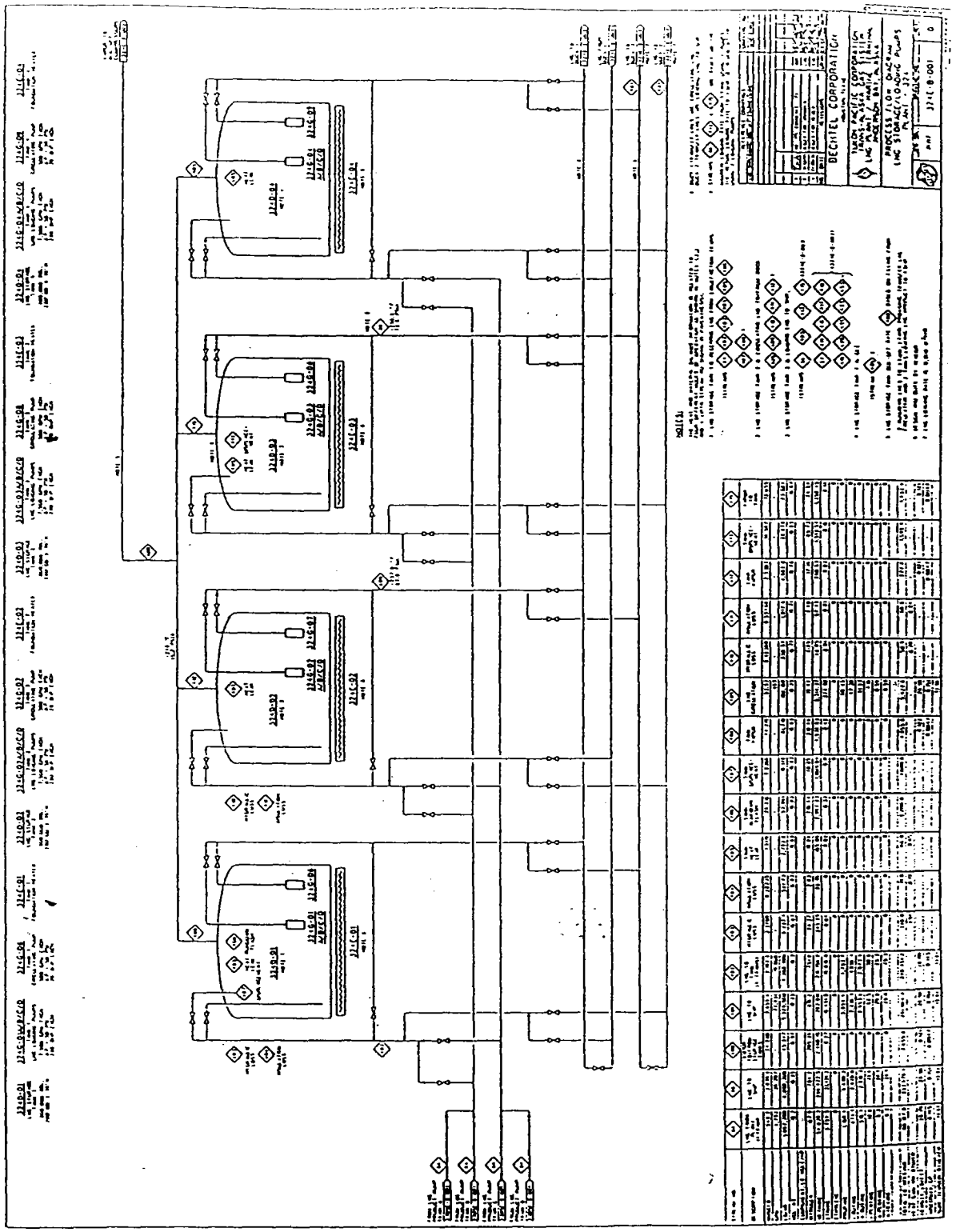

FIGURE 2-9

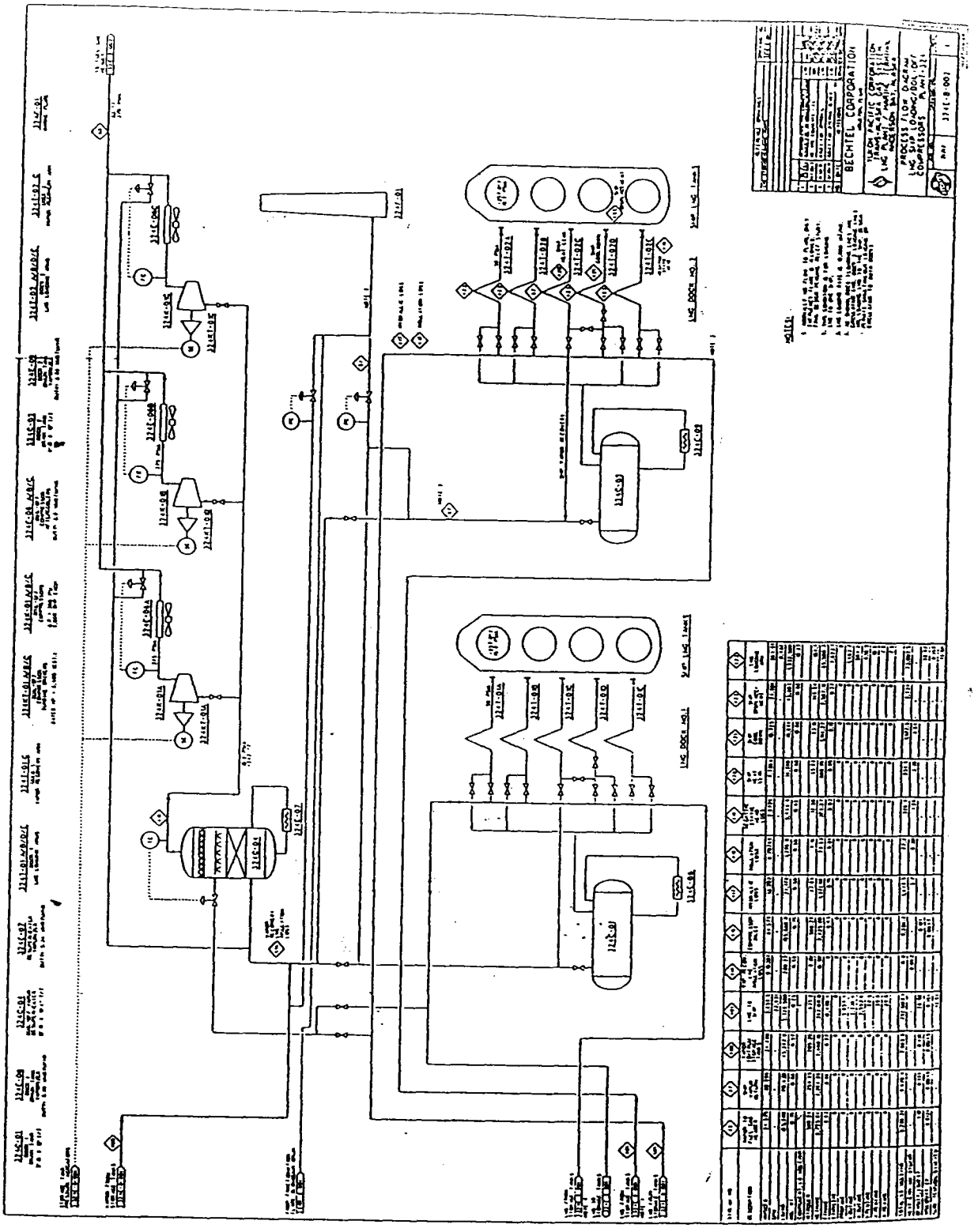

FIGURE 2-10

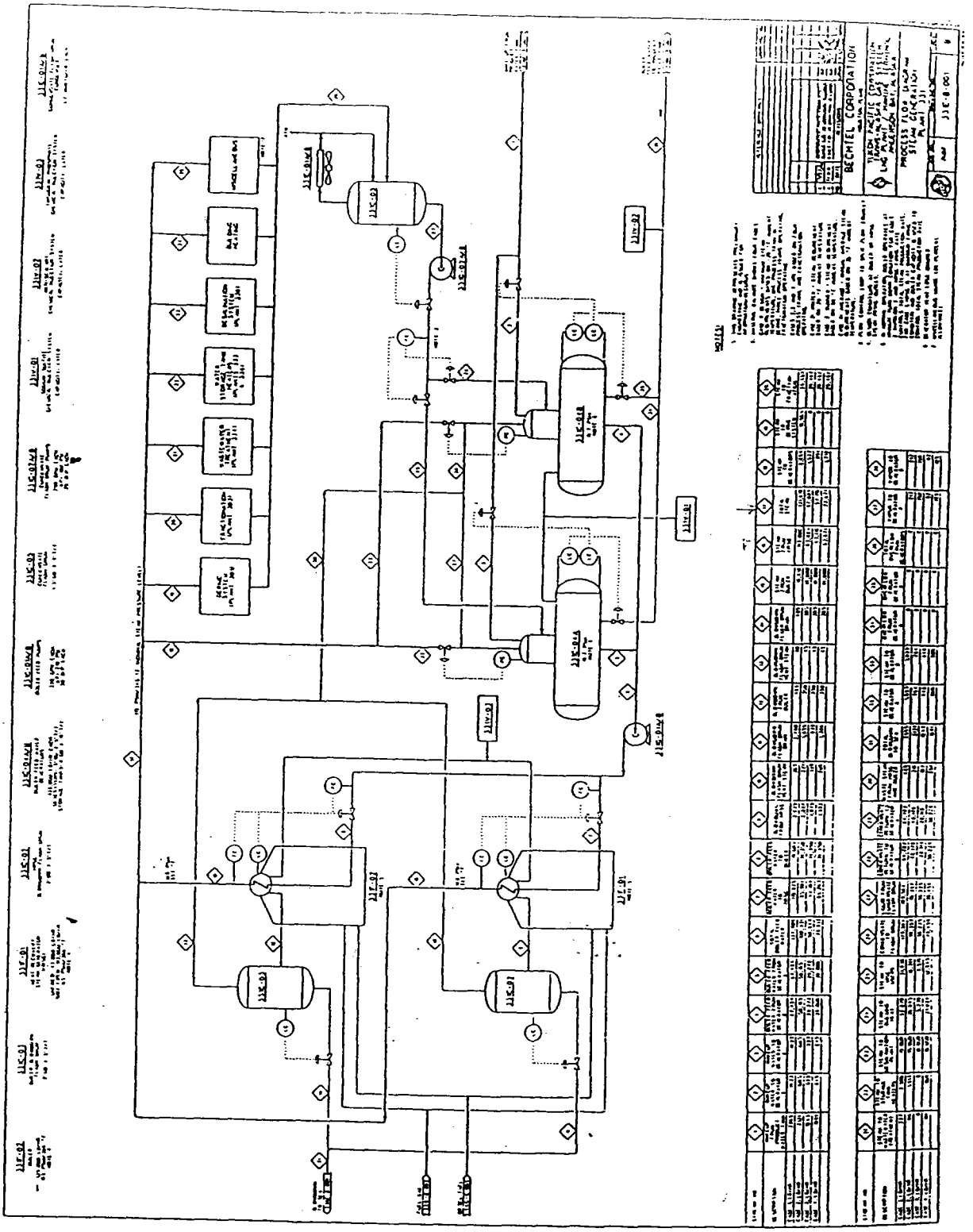

FIGURE 2-12

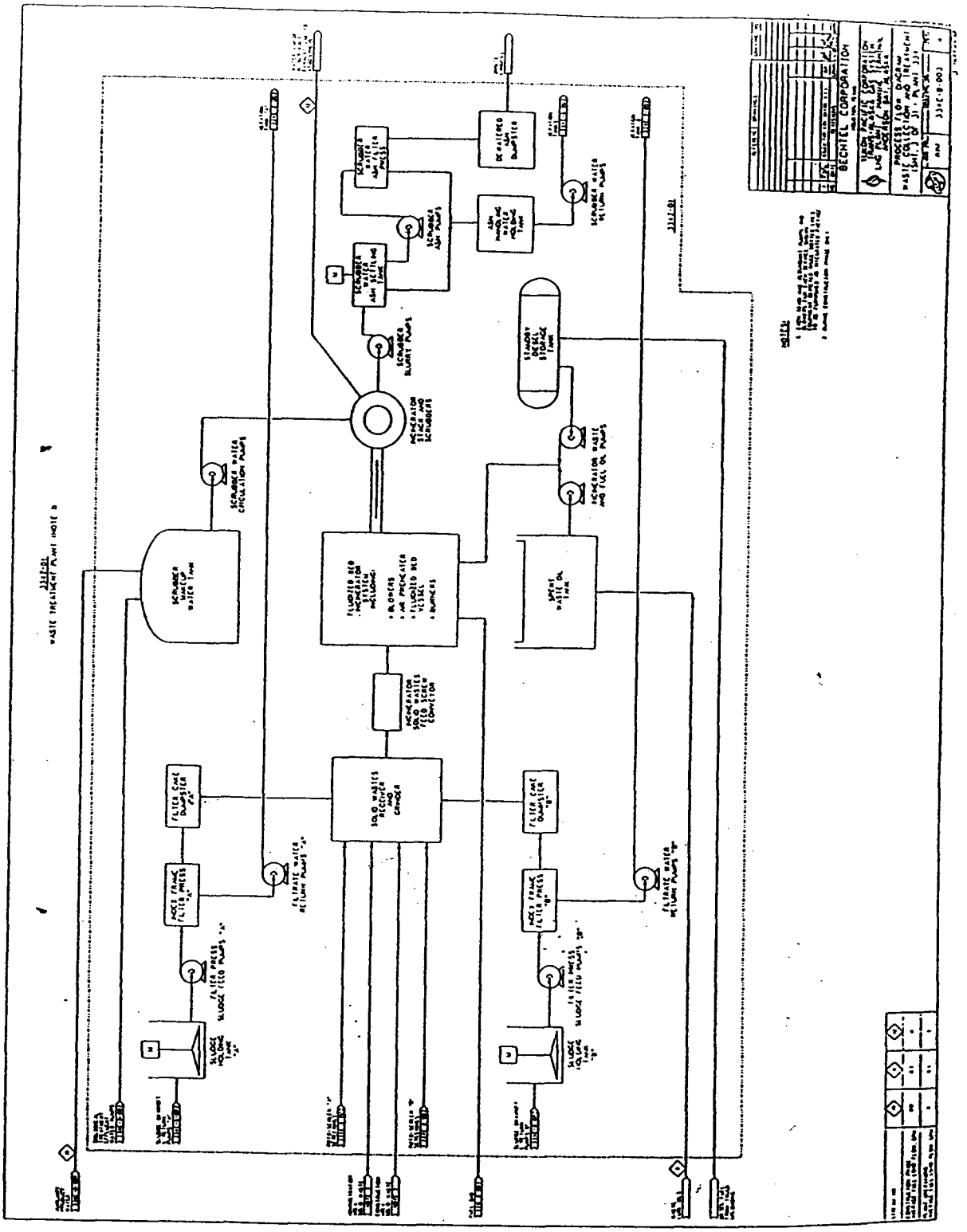
BECHTEL CORPORATION
SCRUBBER MAKEUP WATER TANK
SCRUBBER WATER CIRCULATION PUMPS
SCRUBBER ASH FILTER PRESS
SCRUBBER ASH REFILLING TANK
SCRUBBER ASH PUMPS
SCRUBBER SLURRY PUMPS
SCRUBBER WASTE RETURN PUMPS
INCINERATOR STACK AND SCRUBBERS
INCINERATOR WASTE AND FUEL OIL PUMPS
SPENT WASTE OIL TANK
SOLID WASTES RECEIVER AND CONVEYOR
FILTER CAKE DUMPSTER "A"
FILTER CAKE DUMPSTER "B"
FILTRATE WATER RETURN PUMPS "A"
FILTRATE WATER RETURN PUMPS "B"
FILTER PRESS SLUDGE FEED PUMPS "A"
FILTER PRESS SLUDGE FEED PUMPS "B"
SLUDGE HOLDING TANK "A"
SLUDGE HOLDING TANK "B"